Drainage

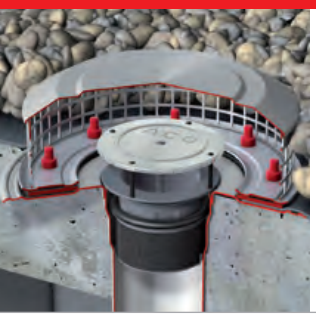

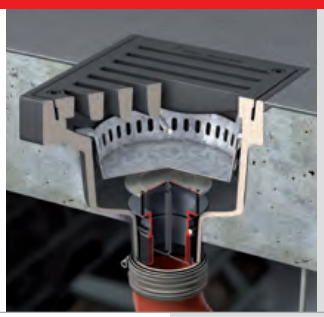

System solutions for

Flat roofs, parking decks, balconies, facades and terraces

ACO

Contents

System solutions for flat roofs, parking decks, balconies, facades and terraces

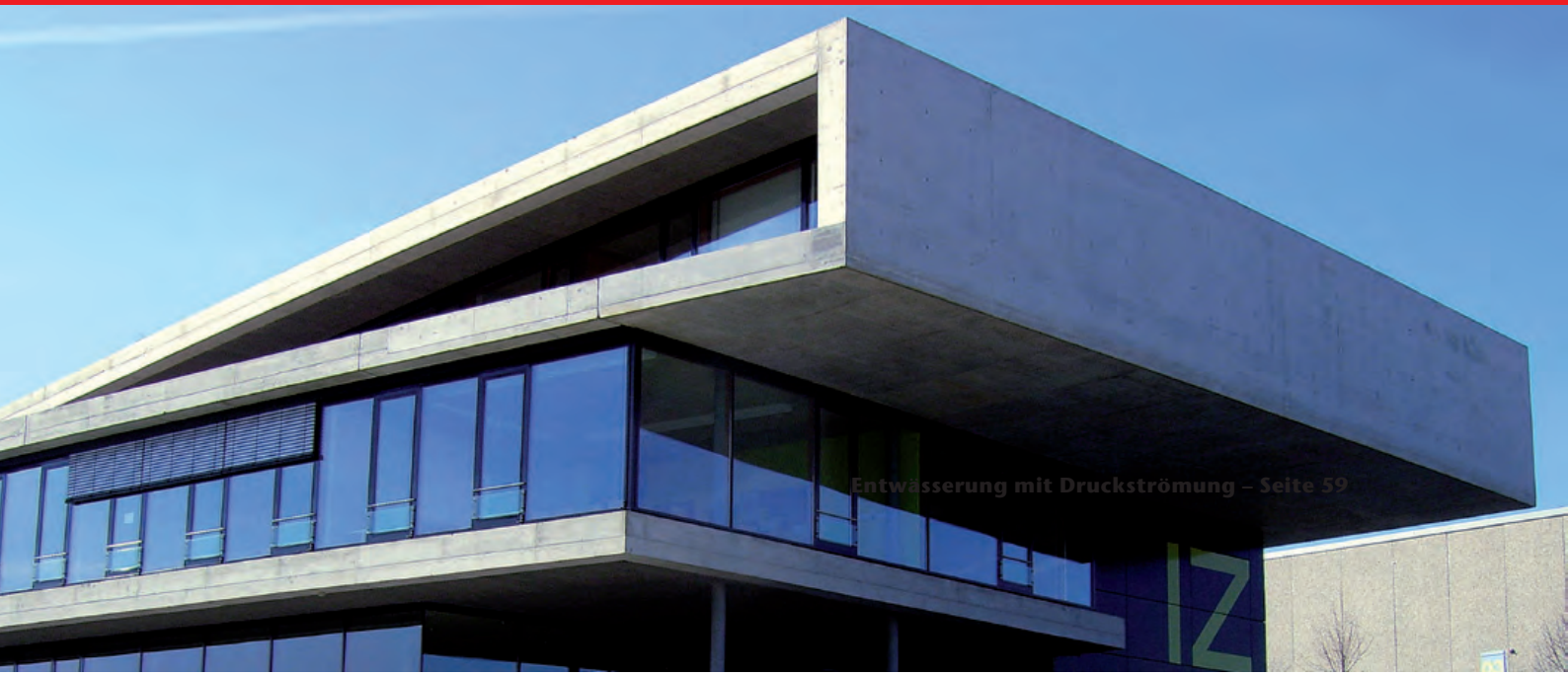

Flat roofs, parking decks, balconies, facades and terraces are all architectural features with their own special problems. They all benefit in particular from professional planning of the drainage aspects. In the light of the general increase in the occurrence of heavy rainfall, we have adjusted to the changing conditions and developed a complete system which delivers the optimum drainage solution for every situation.

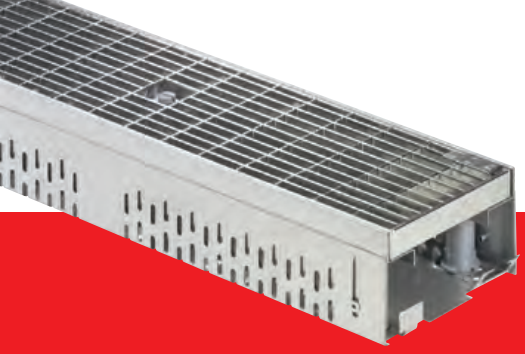

Broad service spectrum for planners

Project assistance

ACO Applications Technology helps you with the drainage plan for each project – from housing complexes to distribution centres. The Applications Technology assistance provided by our back office and field staff includes a wide range of services:

- Technical layout/product selection
- Installation recommendations
- Article descriptions
- Customised on-site advice

ACO Passavant GmbH
Im Gewerbepark 11 c
36457 Stadtlengsfeld
Germany
Tel: +49 (0) 36965 819-0
Fax: +49 (0) 36965 819-361
anwendungstechnik@aco-online.de

Online catalogue

Easy download of scale drawings and article descriptions with the new K12 online catalogue on our website. Product selection made easy with the relevant selection criteria.

- Selection assistant
- Easy keyword and article searches
- Article descriptions (TXT, Datanorm and GAEB)
- Scale drawings (DXF)
- Product visuals
- Installation and assembly instructions

www.aco-haustechnik.de/katalog

K12 as a catalogue, or online

Syphonic drainage systems

The hydraulic calculation of syphonic drainpipe networks and the selection of the relevant drain systems must be carried out in compliance with the applicable regulations and standards. Applications Technology can help you with:

- Hydraulic capacity calculations
- Isometrics and lists of materials

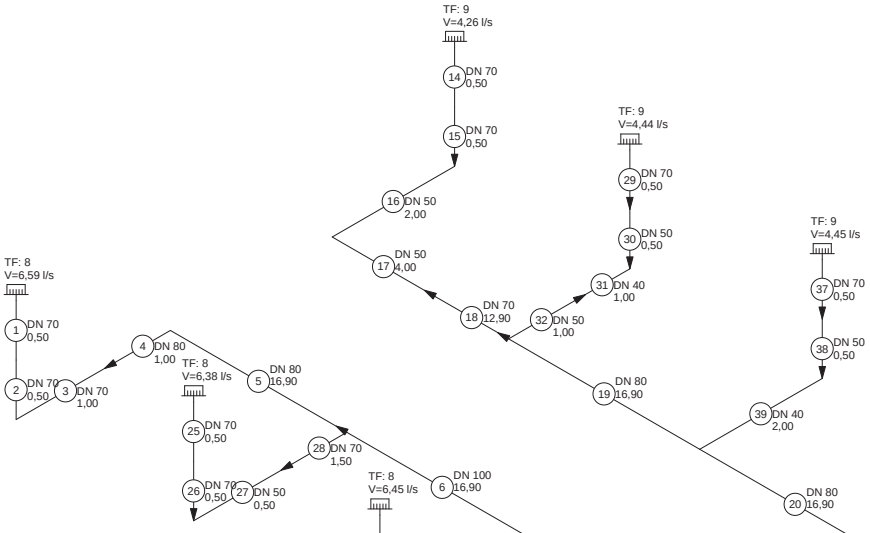

Gravity drainage

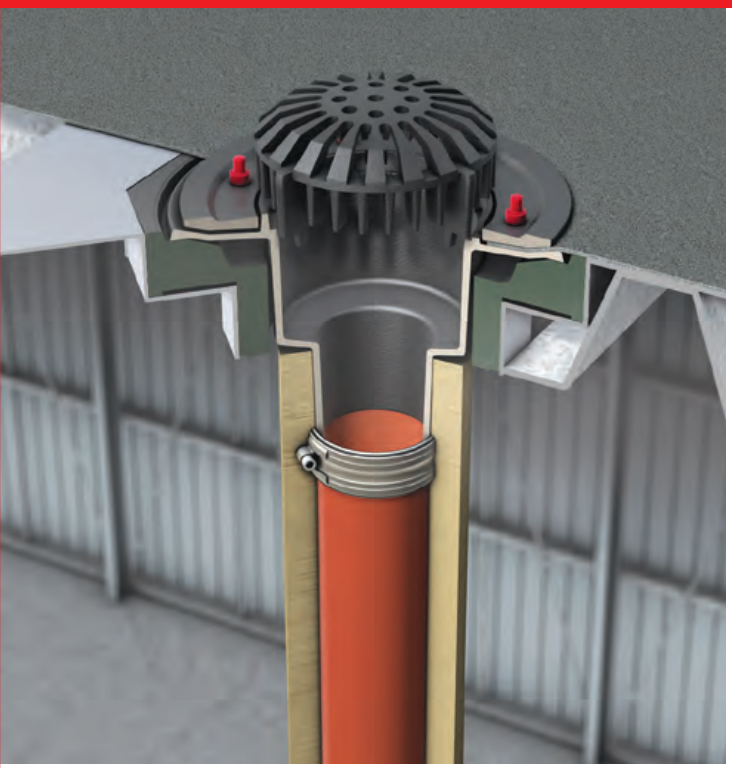

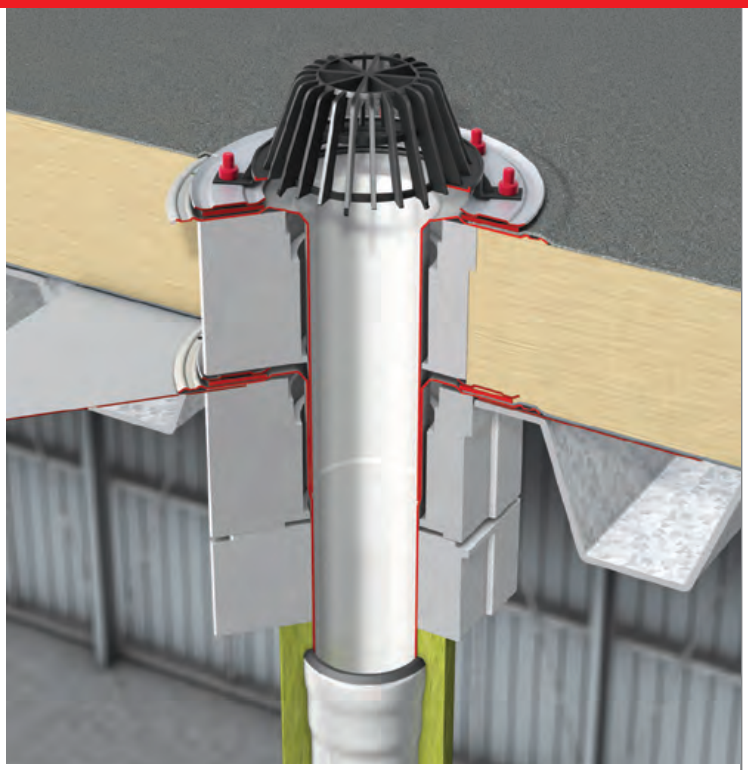

Contents
Gravity drainage
Syphonic drainage
Parking deck drainage
Balcony and terrace drainage
Facade drainage
Pipe systems

ACO Spin flat roof drains for gravity drainage

The roof forms the upper boundary of a building. The roof seals are very important because of the severe stress the roof is exposed to from precipitation, strongly fluctuating climatic influences, and a whole range of traffic loads and stresses.

Roof structures can therefore be divided up into two groups depending on the seal:

- Flat roof structures with one seal
- Flat roof structures with two seals

The Spin flat roof drains can be used in all types of roofs thanks to their modular system. In roofs with two seals, the drain body is integrated with the vapour seal, whilst the riser is in incorporated in the roof sealing membrane. The drains are fitted with compression sealing flanges which allow them to be integrated within all standard sealing membranes.
The drain bodies are installed in special insulating bodies to prevent the formation of of condensation water around the drain body – this is particularly important for thermally-insulated flat roofs, green roofs and parking decks.

A stainless steel flat roof drain for two sealing membranes.

- Planning must comply with EN 12056-3, as well as the flat roof regulations and, where applicable, the green roof regulations.

Flat roof with a gravel protection layer

Roof drainage
General
Drainage can be implemented using roof drains or roof gutters hung in front of the roofs with appropriate eaves. Internal drainage is recommen ded for roofs with gentle slopes (up to 5°).

Roof surfaces with internal drainage systems must have at least two drains or one drain and a safety overflow independent of the size of the roof.

Roof drains
The drains of internal roof drainage systems must be arranged at the lowest points of the roof and capable of being connected to the roof seal with a permanent and watertight join.

Roof drains must generally be positi oned at least 30 cm away from other installations on the roof, joints or other ducts penetrating the roof sealing membrane. They must also be installed so that they create no thermal bridge in the construction of the roof.

Roof drains must be freely accessible for maintenance purposes.

Roof drains must be fastened within the substructure.

The flanges in roof drains should be incorporated within the substructure where possible. Two-piece roof drains should be used in thermally insulated roof structures with vapour seals.
Thermally insulated roof drains must be installed if heated spaces or used rooms are located directly below the ceiling.

Roof drains are integrated within the roof sealing membranes by fixed and loose flanges, adhesive flanges or integrated connecting membranes. The connecting membranes must be suitable for the specific roof sealing membrane used in each case.

Pre-fabricated roof drains must comply with EN 1253.

In the case of green roofs, there should be no planting in the area immediately around the roof drains.

Emergency drainage
Flat roof drainage systems must always be laid out in accordance with the reference rainfall figures. The reference rainfall can be exceeded during periods of heavy rainfall. This can cause water to pool on the surface of a flat roof.

An independent emergency drainage system for flat roof drains is therefore required in accordance with EN 12056-3. This emergency drainage system must enable rainwater to be drained safely onto empty surfaces. It is forbidden to connect the emergency drainage system to the regular drainage system.

Fire protection
Flat roof drains with fire protection are required on flat roofs in accordance with state building regulations if the separation between the roof drains and a rising wall in these areas is less than 5 metres (walls with openings or with no fire resistance capacity).

In this case, an appropriate fire protection roof drain without an odour seal must be installed. This prevents the spread of fire and smoke into neighbouring parts of the building.

Special attention should be given to the fire resistance class of the roof structure. The roof drain must have at least the same fire resistance class or a higher fire resistance class than the ceiling.

Contents
Gravity drainage
Syphonic drainage
Parking deck drainage
Balcony and terrace drainage
Facade drainage
Pipe systems

Calculating the number of flat roof drains and emergency roof drains required for gravity drainage systems

The following parameters are specified in DIN 1986-100 (version May 2008) Chapter 14.2.1, to calculate the number of drains required for a flat roof drainage system:

- The size of the effective roof in square metres (A)
- Type of roof – flow coefficient (C)
- Local reference rainfall in litres/second and hectare l/(s∗ha) ($r_{(D,T)}$)

Effective roof area
In accordance with DIN 1986-100, Chapter 14.2.4.1, calculating the effective roof area must be based on the roof area projected onto the floor plan.

Flow coefficient
The flow coefficient (C) is determined by the type of roof to be drained. This is selected from Table 9 in DIN 1986-100. The following is a short extract:

Type of drained area	Flow coefficient (C)
Membrane roof	1.0
Concrete roof	1.0
Gravel roof	0.5
Extensive greening under 10 cm layered structure	0.5
Intensive greening	0.3

Reference rainfall
The variable reference rainfall $r_{(D,T)}$ consists of two parameters:

D = rainfall duration in minutes
T = annuality of the reference rainfall

The reference rainfall for flat roof drainage systems is based on a rainfall period of 5 minutes and an annuality of five years.
Calculations therefore refer to a reference rainfall of $r_{(5,5)}$.

The relevant reference rainfall for rainwater drainage in gravity drainage systems $r_{(5,5)}$ is taken from KOSTRA/DWD 2000/[1] in accordance with the specific location.

Abbreviations are explained as follows:

Reference rainfall	Duration of the rainfall event	Annuality of the rainfall event	Application
$r_{(5,5)}$	5 minutes	Every 5 years	Rainfall discharge for gravity drainage systems
$r_{(5,100)}$	5 minutes	Every 100 years	Rainwater discharge for emergency drainage systems

Calculating the rainwater drainpipes

- Downpipes

DIN 1986-100, Section 14.2.7.2 specifies that the nominal widths of the downpipes must not be smaller than the connected nominal width of the associated flat roof drain or the collective connecting line. The rainwater downpipes can be calculated with a level of fill up to f = 0.33. Downpipes with inclines ≥10° are ignored when calculating the drainage capacity.
In the case of inclined drainpipe sections with gradients of <10°, the dimensions of the rainwater downpipes must be calculated using the gradient of the inclined section and a level of fill of h/d1 = 0.7.

- Single and connective connecting lines

DIN 1986-100, Section 14.2.7.1 specifies that single connecting pipes must be dimensioned in the same way as collective connecting pipes. However, the nominal width of the pipes must not be smaller than the nominal width of the flat roof drain. In addition, collective connecting pipes must be dimensioned in the same way as connecting lines.

- Connecting lines and buried pipes

DIN 1986-100, Section 14.2.7.3 specifies that the minimum diameter of buried pipes must be DN 100. The dimensioning of buried pipes outside of buildings must take into account a minimum flow rate of v = 0.7 m/s and a maximum flow rate of v = 2.5 m/s. The minimum gradient must be 1:DN.
The limit for the level of fill h/d1 is 0.7. Caution: collecting pipes and buried pipes within buildings must be dimensioned with a level of fill of h/d1 = 0.7 taking into consideration a minimum gradient of 0.5 cm/m.

[1] **KO**ordinierte **ST**arkniederschlags-**R**egionalsierungs-**A**uswertungen des Deutschen Wetterdienstes, Bezug: CD-Rom über ITWH, Hannover. Im Anhang A von DIN 1986-100 befindet sich ein Auszug mit Regenspenden für wichtige deutsche Städte.

Calculation example
Flat roof drain for gravity drainage system

A gravity rainwater drainage system for a flat roof is planned for a large warehouse in Rosenheim/Germany. The roof will have an effective area of 1300 m² and is designed as an air-insulated roof with a gravel cover. Six buried pipeline connections are available to drain the roof.

The dimensioning figures for the rainwater drainage are selected in accordance with the parameters.

These are:

- Effective roof area (A) = 1.300 m²
- Flow coefficient (C) for gravel covered roof = 0.5 in Table 9 pursuant to DIN 1986-100
- Reference rainfall $r_{(5,5)}$ for Rosenheim pursuant to KOSTRA-DWD = 452 l/(s)* ha

These figures are input into the following formula to calculate the rainwater flow capacity:

Reference rainfall $r_{(5,5)}$	x	flow coefficient C	x	effective roof area A	/	10.000	=	rainwater flow capacity Q
452	x	0.5	x	1.300	/	10.000	=	29.38 l/s

Preliminary considerations for selecting the flat roof drains

Because the downpipes can be connected directly to the flat roof drains, vertical downpipes will be used. Gravel baskets are required to optimally drain the rainwater from the gravel roof. Drain bodies only require one compression-sealing flange because the roof is air-insulated with only one sealing membrane. These considerations and calculations lead to the selection of the ACO Spin flat roof drain DN 100 made of stainless steel with a stainless steel gravel basket. According to the specifications table (see page 15) the flat roof drain has an outflow capacity of 5.6 l/s.

The number of flat roof drains required is calculated from the rainwater outflow divided by the outflow capacity of the flat roof drain:

Rainwater flow capacity Q	/	outflow capacity of the selected flat roof drain	=	number of flat roof drains required
29.38	/	5.6	=	5.246 drains

Discussion of the results

The calculated figure of 5.246 is rounded upwards. 6 flat roof drains are required for the proper drainage of the roof. Consideration also has to be given to the outflow capacity of the drainpipes (see Fig. 26 from DIN 1986-100 or Table 8 from DIN EN 12056-3).

The DN 100 downpipes can be assigned a degree of fill of f = 0.33 according to this table. This corresponds to an outflow capacity per pipe of 10.7 l/s.

Contents
Gravity drainage
Syphonic drainage
Parking deck drainage
Balcony and terrace drainage
Facade drainage
Pipe systems

Emergency drainage

The water build-up heights required for flat roof drains for gravity drainage and the associated emergency drains are specified in EN 1253-1, Table 10. The water build-up heights for nominal widths of DN 70 – DN 150 are as follows:

Nominal width	Maximum water build-up height
DN 70	35 mm
DN 100	35 mm
DN 125	45 mm
DN 150	45 mm

Water build-up height example
The maximum water build-up height for a DN 150 flat roof drain is 45 mm.
The emergency drainage system is ctivated when this height of 45 mm is exceeded. The maximum water build-up height at the emergency drain is again 45 mm pursuant to Table 10 in EN 1253-1. This means that the maximum water build-up height for the emergency drain is reached when the water level rises to 90 mm.

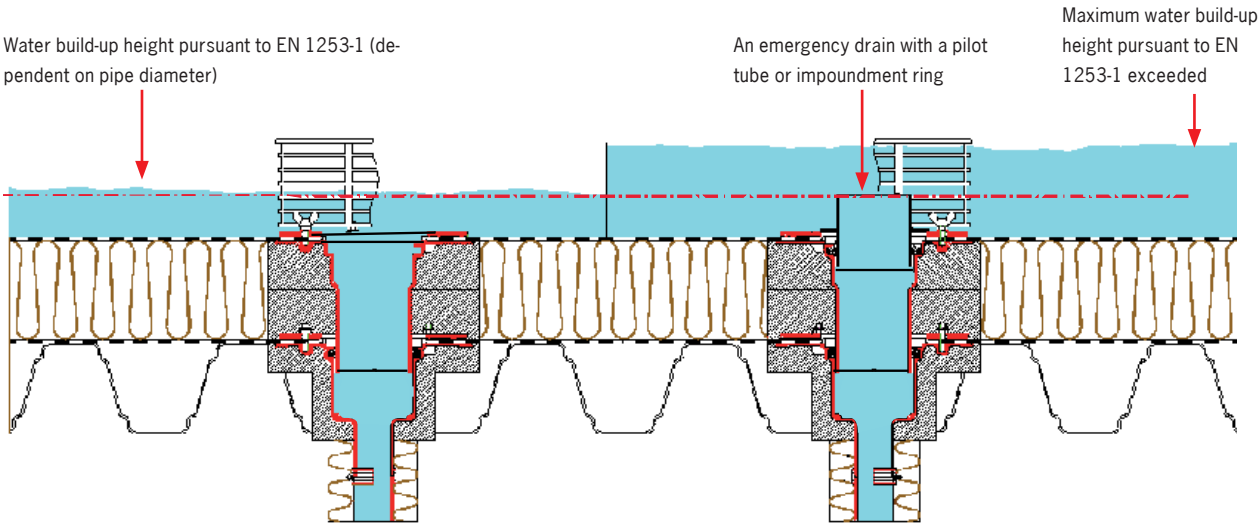

The reference rainfall for the emergency drainage Q_{Not} is calculated using the following formula:

$$\left(r_{(5,100)} - r_{(5,5)} \times C \right) \times \frac{A}{10.000} = Q_{Not}$$

Caution: note that the reference rainfall $r_{(5,5)}$ first has to be multiplied by the flow coefficient C before deducting the result from the reference rainfall for the one hundred year rainfall event $r_{(5,100)}$.

The emergency drainage system on its own should be capable of draining the 100-year rainfall if a building requires an unusual degree of protection (cf. EN 12056-3: 2001-01, Table 2).

Calculation example
Emergency drainage for a gravity drainage system

A gravity rainwater drainage system for a flat roof is planned for a large warehouse in Rosenheim/Germany. The roof will have an effective area of 1300 m² and is designed as an air-insulated roof with a gravel cover.
The dimensioning figures for the rainwater drainage are selected in accordance with the parameters. These are:

- Effective roof area (A) = 1.300 m²
- Flow coefficient (C) for gravel covered roof = 0.5 in Table 9 pursuant to DIN 1986-100
- Reference rainfall for 100-year rain $r_{(5,100)}$ für Rosenheim pursuant to KOSTRA-DWD = 853 l/(s*ha)

This value is incorporated in the following formula to calculate the rainwater flow capacity.

$$(853 - 452 \times 0.5) \times \frac{1.300}{1.0000} = 81.51 \text{ l/s}$$

The Spin DN 100 Attika roof drain made of stainless steel (Article No. 0174.78.24) is selected for the emergency drainage in this example. The outflow capacity of this drain is 6.0 l/s according to DIN.

The number of flat roof drains required is calculated by dividing the rainwater flow capacity for the emergency drainage Q_{Emer} by the outflow capacity of the selected parapet roof drain:

Rainwater flow capacity for emergency drainage	/	Outflow capacity of a selected flat roof drain	=	Number of flat roof drains required
81.51	/	6.0	=	13.58 drains

Explanation of the results

The calculated figure of 13.58 is rounded upwards. This means that 14 emergency drains are required to properly drain the roof area. To ensure that the volumes of water which have to be drained during an emergency are transferred to the designated area, each parapet drain is drained by a separate pipe.

Contents
Gravity drainage
Syphonic drainage
Parking deck drainage
Balcony and terrace drainage
Facade drainage
Pipe systems

Outflow capacity

ACO Spin flat roof drains

The outflow capacities of the flat roof drains are dependent on the nominal width of the drain body, the type of grating used, the inclination of the pipes, and whether an upper part with a compression sealing flange is placed on top of the drain body. Make sure that the pipes used are properly dimensioned.

Cast Iron

DN 70

			Ball grating	Flat grating	Top section	Cast iron top section
Nominal width	Inclination	Model	Article No. 7000.09.00	Article No. 7000.19.00	Article No. 5141.81.00 5141.87.00 5141.89.00	Article No. 5141.83.00
DN 70	1.5°	without upper part	6.0 l/s	5.4 l/s	5.2 l/s	4.8 l/s
DN 70	1.5°	with upper part	5.5 l/s	4.4 l/s	4.2 l/s	3.8 l/s
DN 70	90°	without upper part	7.0 l/s	6.7 l/s	6.2 l/s	5.8 l/s
DN 70	90°	with upper part	6.5 l/s	5.7 l/s	5.2 l/s	4.8 l/s

DN 100

			Ball grating	Flat grating	Top section	Cast iron top section	Top frame with grating
Nominal width	Inclination	Model	Article No. 7000.10.00	Article No. 7000.20.00	Article No. 7000.40.00	Article No. 7000.28.00	Article No. 7000.41.00 7000.42.00
DN 100	1.5°	without upper part	9.0 l/s	8.4 l/s	10.7 l/s	7.6 l/s	12.1 l/s
DN 100	1.5°	with upper part	9.0 l/s	8.4 l/s	10.7 l/s	7.6 l/s	12.1 l/s
DN 100	90°	without upper part	8.0 l/s	6.2 l/s	10.7 l/s	7.6 l/s	15.2 l/s
DN 100	90°	with upper part	8.0 l/s	6.2 l/s	10.7 l/s	7.6 l/s	15.2 l/s

DN 125

			Ball grating	Flat grating	Top section	Cast iron top section	Top frame with grating
Nominal width	Inclination	Model	Article No. 7000.10.00	Article No. 7000.20.00	Article No. 7000.40.00	Article No. 7000.28.00	Article No. 7000.41.00 7000.42.00
DN 125	1.5°	without upper part	12.0 l/s	10.2 l/s	12.6 l/s	7.6 l/s	16.4 l/s
DN 125	1.5°	with upper part	12.0 l/s	10.2 l/s	12.6 l/s	7.6 l/s	16.4 l/s
DN 125	90°	without upper part	12.0 l/s	10.2 l/s	12.6 l/s	7.6 l/s	16.4 l/s
DN 125	90°	with upper part	12.0 l/s	10.0 l/s	12.6 l/s	7.6 l/s	16.4 l/s

DN 150

			Ball grating	Flat grating	Top section	Cast iron top section	Top frame with grating
Nominal width	Inclination	Model	Article No. 7000.10.00	Article No. 7000.20.00	Article No. 7000.40.00	Article No. 7000.28.00	Article No. 7000.41.00 7000.42.00
DN 150	1.5°	without upper part	14.5 l/s	12.6 l/s	15.0 l/s	7.6 l/s	21.2 l/s
DN 150	1.5°	with upper part	14.5 l/s	12.6 l/s	15.0 l/s	7.6 l/s	21.2 l/s
DN 150	90°	without upper part	13.5 l/s	11.0 l/s	15.0 l/s	7.6 l/s	18.5 l/s
DN 150	90°	with upper part	13.5 l/s	11.0 l/s	15.0 l/s	7.6 l/s	18.5 l/s

Cast iron with fire protection insert

DN 100

Nominal width	Inclination	Model	Ball grating Article No. 7000.10.00	Flat grating Article No. 7000.20.00	Top frame with grating Article No. 7000.40.00	Top frame with grating Article No. 7000.28.00	Top frame with grating Article No. 7000.41.00 7000.42.00
DN 100	90°	without upper part	7.4 l/s	7.3 l/s	8.9 l/s	6.8 l/s	11.8 l/s
DN 100	90°	with upper part	7.4 l/s	7.0 l/s	8.5 l/s	6.5 l/s	11.8 l/s

Stainless Steel

DN 70

Nominal width	Inclination	Model	Plastic gravel basket Article No. 0174.46.66	Stainless steel gravel basket Article No. 0174.46.59 0174.46.62
DN 70	1.5°	without lower part	2.6 l/s	2.7 l/s
DN 70	1.5°	with lower part	2.8 l/s	3.0 l/s
DN 70	90°	without lower part	2.5 l/s	2.6 l/s
DN 70	90°	with lower part	2.7 l/s	2.8 l/s

DN 100

Nominal width	Inclination	Model	Plastic gravel basket Article No. 0174.46.66	Stainless steel gravel basket Article No. 0174.46.59 0174.46.62
DN 100	1.5°	without lower part	5.0 l/s	5.9 l/s
DN 100	1.5°	with lower part	4.7 l/s	5.3 l/s
DN 100	90°	without lower part	4.7 l/s	5.6 l/s
DN 100	90°	with lower part	5.1 l/s	5.7 l/s

DN 125

Nominal width	Inclination	Model	Plastic gravel basket Article No. 0174.46.66	Stainless steel gravel basket Article No. 0174.46.59 0174.46.62
DN 125	1.5°	without lower part	8.3 l/s	9.9 l/s
DN 125	1.5°	with lower part	8.7 l/s	8.9 l/s
DN 125	90°	without lower part	8.5 l/s	8.4 l/s
DN 125	90°	with lower part	8.5 l/s	8.4 l/s

Stainless steel with fire protection insert

DN 100

Nominal width	Inclination	Model	Stainless steel gravel basket Article No. 0174.46.59 0174.46.62
DN 100	90°	without lower part	4.7 l/s
DN 100	90°	with lower part	4.7 l/s

Contents
Gravity drainage
Syphonic drainage
Parking deck drainage
Balcony and terrace drainage
Facade drainage
Pipe systems

ACO Spin flat roof drains

For green roof drainage

The countryside is being increasingly paved over as built-up areas grow more extensive. The associated faster run-off of rainwater gives rise to high water levels and flooding and the associated serious damage. Greened roofs make it possible to retain at least 50 % of the yearly average rainwater depending on the type of roof.

Green roofs are a relatively easy way of compensating for areas which have been paved over, and to minimise peak rainwater flows.

There are two main types of green roof:

- Extensive greening:
  Extensive greening can generally be achieved with a minimum amount of effort. These roofs are characterised by a natural looking vegetation cover with plants adapted to extreme habitats.

- Intensive greening:
  Intensive greening involves the planting of perennials, shrubs, lawns as well as trees. This type of green roof requires intensive gardening and regular watering and the addition of fertilizer. The soil structure for this type of green roof requires proper drainage.

ACO developed a range of additional components to ensure the safe and regulated drainage of percolated rainwater. This range can be combined with the standard flat roof drainage products.

Extensive greening

Regulations and standards
Regulations and standards must be observed when planning and executing roof drainage systems. The following lists a number of extracts from the most important regulations:

Roof greening regulations version 2008/DIN 1986-100

Roof drains in planted surfaces
Flat roof drains within planted surfaces have to be fitted with a control shaft to protect the drains from dirt and penetrating roots. This control shaft should not hinder drainage in any way. The drains can be protected by gravel or paved surrounds (Roof greening regulations, Chapter 6.5.3.1).

DIN 1986-100 (Chapter 5.8.3) also specifies in the same way as the Roof greening regulations that drains must be protected from the encroachment of plants. For instance, this standard recommends that the drains are surrounded by an at least 50 cm wide gravel protection zone.

Roof drains away from greened surfaces
Flat roof drains which do not lie within greened surfaces are usually installed in a gravel strip and are equipped with a gravel basket to prevent gravel from entering the drain (Roof greening regulations, Chapter 6.5.3.2).

Emergency drainage
Caution: Ensure that the layered structure of the green roof does not block the inflows to the emergency drains. Emergency drains must also be planned to ensure that they are kept free of encroaching vegetation.

In addition, the emergency drainage systems for greened flat roofs must comply with the same principles as for conventional flat roofs. It is therefore essential that the emergency drainage system is not connected to the normal drainage system: it must be connected to a dedicated outflow from which the water can drain safely onto floodable land without causing any damage.

Extensive greening

Intensive greening

Contents
Gravity drainage
Syphonic drainage
Parking deck drainage
Balcony and terrace drainage
Facade drainage
Pipe systems

Installation

ACO Spin flat roof drain made of cast iron

Concrete roof: Pouring in
Flat roof drains can be installed on site when the concrete is poured in. Caution: Ensure that the fixed flange is positioned slightly below the top surface of the concrete because a gradient towards the drain body must be created when the sealing membrane is installed.

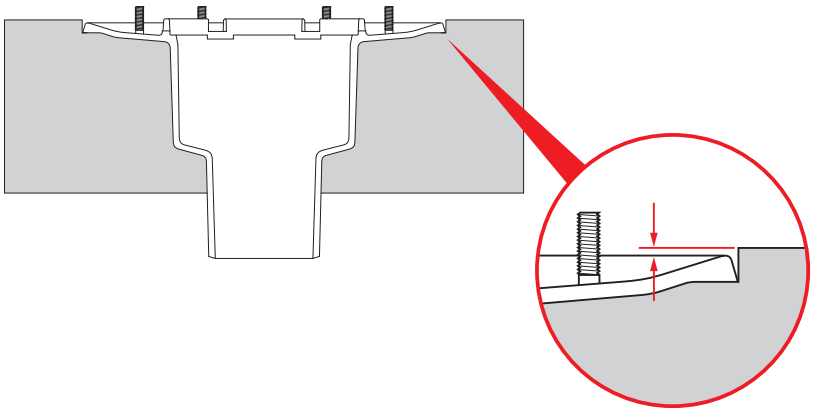

Concrete roof: Core boreholes
Core boreholes with two different diameters and two different heights have to be cut to install the flat roof drains.

- Ø a x b: core borehole dimensions for the flange (flange support)
- Ø c: core borehole dimension for the drain body

The core hole for the flange support must be cut to enable the sealing membrane to be laid towards the drain body with a gradient as stipulated in DIN EN 18195. Each of the product pages contains the dimensions of the core boreholes required for the product.

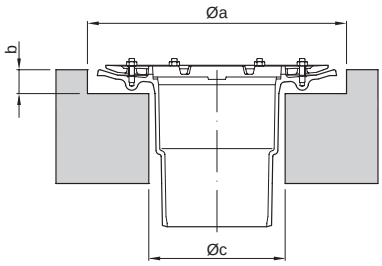

Trapezoidal sheet metal roof
Cast iron drains cannot be installed directly onto a trapezoidal sheet metal roof. A mounting plate* is required.

The matching insulating mounting for the flat roof drain must also be installed in the mounting plate to ensure that the drain body is perfectly positioned on the mounting plate.

The mounting plate and the trapezoidal sheet roofing must be connected pursuant to DIN 18807. The mounting plate must be connected to the trapezoidal sheet roof as follows:

- Two connecting elements on the transverse side in the top beam
- One connecting element next to every covered gutter
- Connecting elements on the longitudinal edge, separation: 120 mm

Caution: Every hole cut in the trapezoidal roof reduces its load-bearing capacity. Verification of the load-bearing capacity of the combined mounting plate and trapezoidal sheet roof can only be issued by a structural engineer.

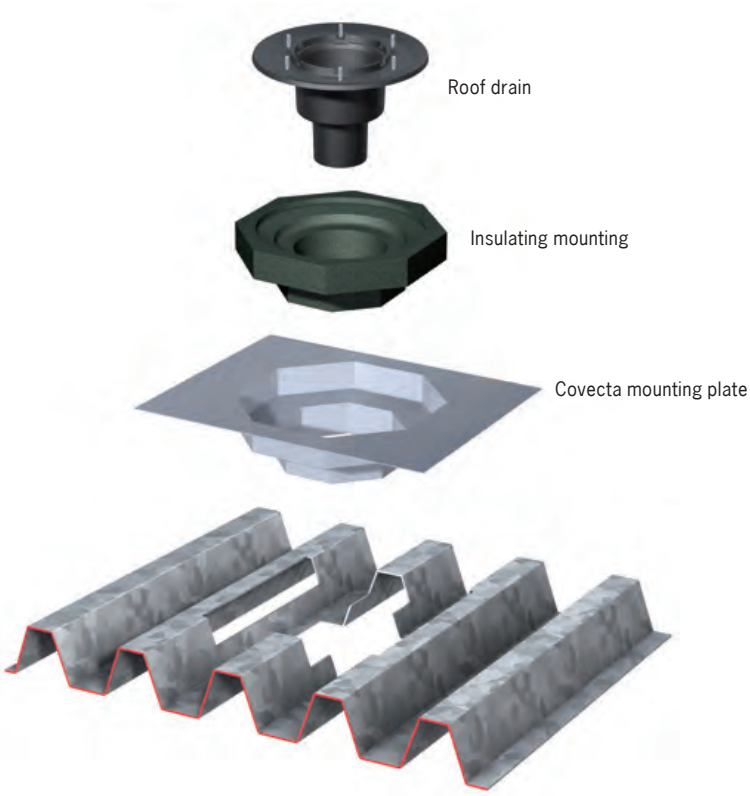

*Covecta, Deggingen, supplies mounting plates for all standard ACO flat roof drains.
Tel. +49 (0) 7334 8012, Fax +49 (0) 7334 4323

Heating
Flat roof drains can also be installed with auxiliary heating to prevent the drain from freezing. To reduce energy consumption to a minimum, it is recommended that the heated drains be controlled by an additional thermostat. Installation of an FI switch (30 mA) is recommended. When Spin two-piece cast iron flat roof drains are installed, the heating is always installed on the drain body (below the lower sealing level).

2-piece Spin flat roof drain with heating (Article No. 7000.85.00) and thermostat (not supplied)

Installing the sealing membrane
Bitumen membranes as well as high polymer sealing membranes can be connected to the Spin cast iron flat roof drains by the compression sealing flange.
One spacer below and one spacer above the sealing membrane must be put into place when connecting thin high polymer sea-ling membranes to the compression sea-ling flange. These spacers ensure that any unevenness in the fixed and loose flanges on the drain are compensated for to ensure that a watertight seal is created when the flanges are tightened up. The spacers can also be made on site from spare material from the same sealing membrane.

After placing the loose flange on top, the nuts must be tightened up one after the other with a torque.

Using the extension element (= top section)
DIN 1986-100, Chapter 5.7.3.1 stipulates that in the case of two-piece flat roof drains, there must be a tight seal between the drain body and the top section. This ensures that the thermal insulation is not damaged by rainwater in the event that wastewater backflows up the pipe.

The upper parts for cast iron flat roof drains are always supplied as standard with a sealing ring. This is installed between the drain body and the upper part.

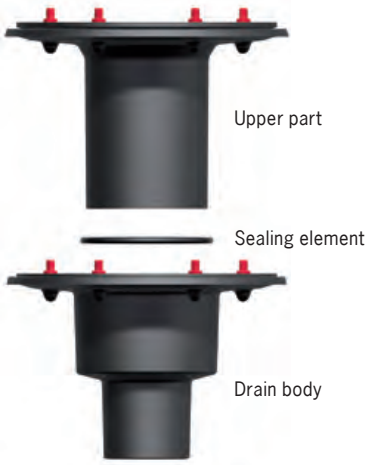

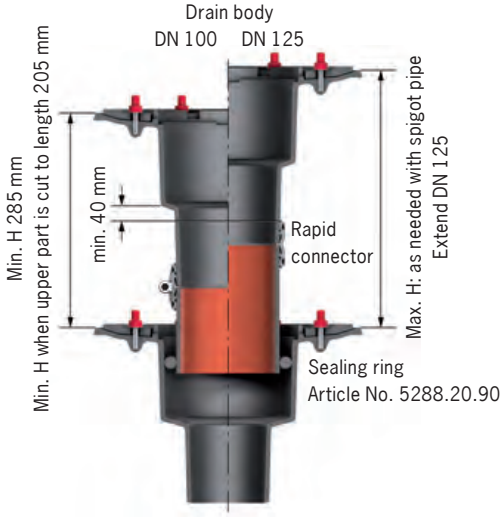

Contents
Gravity drainage
Syphonic drainage
Parking deck drainage
Balcony and terrace drainage
Facade drainage
Pipe systems

Pipe connections

ACO Spin flat roof drains made of cast iron

Pipe type	With transition elements	Suitable for connection to
DN 70		
GM-X pipe with coupling socket	CV connector transition 0174.14.26	Spin flat roof drain made of cast iron DN 70
Spigot pipe with no coupling socket	CV connector DN 70	
HT pipe with coupling socket	HT/spigot pipe connector DN70/DN70	
DN 100		
GM-X pipe with coupling socket	CV connector DN 100	Spin flat roof drain made of cast iron DN 100
Spigot pipe with no coupling socket	Transition 0174.14.27	
HT pipe with coupling socket	CV connector DN 100	
DN 125		
GM-X pipe with coupling socket	Direct connection	Spin flat roof drain made of cast iron DN 125
Spigot pipe with no coupling socket	CV connector DN 125	
HT pipe with coupling socket	HT-spigot pipe connector DN 125/DN 125	
DN 150		
GM-X pipe with coupling socket	Direct connection	Spin flat roof drain made of cast iron DN 150
Spigot pipe with no coupling socket	CV connector DN 150	
HT pipe with coupling socket	HT-spigot pipe connector DN 150/DN 150	

Installation

ACO Spin flat roof drain made of stainless steel

Concrete roof: Pouring in
Flat roof drains can be installed on site when the concrete is poured in. Caution: Ensure that the fixed flange is positioned slightly below the top surface of the concrete because a gradient towards the drain body must be created when the sealing membrane is installed.

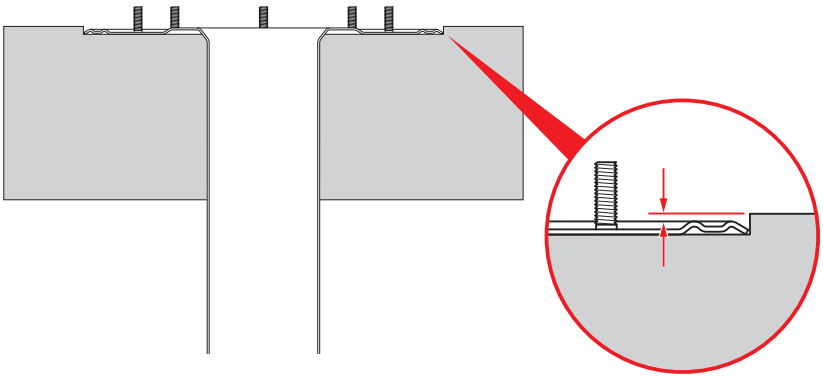

Concrete roof: Core boreholes
Core boreholes with two different diameters and two different heights have to be cut to install the flat roof drains.

- Ø a x b: core borehole dimensions for the flange (flange support)
- Ø c: core borehole dimension for the drain body

The core hole for the flange support must be cut to enable the sealing membrane to be laid towards the drain body with a gradient as stipulated in DIN EN 18195.

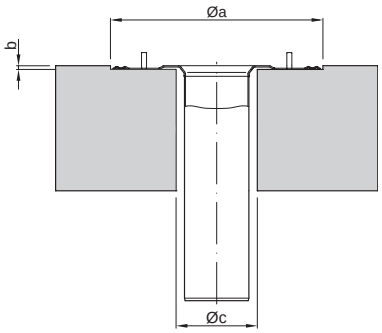

Trapezoidal sheet metal roof
Stainless steel drains cannot be installed directly onto a trapezoidal sheet metal roof. A fastening plate is required.

The fastening plate and the trapezoidal sheet roofing must be connected pursuant to DIN 18807. The fastening plate must be connected to the trapezoidal sheet roof as follows:

- Two connecting elements on the transverse side in the top beam
- One connecting element next to every covered gutter

Caution: Every hole cut in the trapezoidal roof reduces its load-bearing capacity. Verification of the load-bearing capacity of the combined mounting plate and trapezoidal sheet roof can only be issued by a structural engineer.

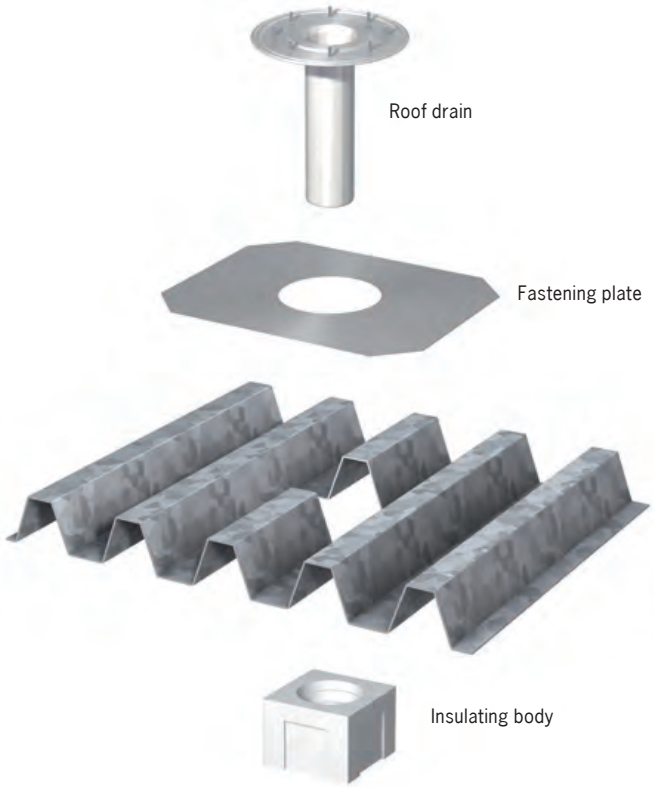

Contents
Gravity drainage
Syphonic drainage
Parking deck drainage
Balcony and terrace drainage
Facade drainage
Pipe systems

Heating
Flat roof drains can also be installed with auxiliary heating to prevent the drain from freezing. To reduce energy consumption to a minimum, it is recommended that the heated drains be controlled by an additional thermostat. Installation of an FI switch (30 mA) is recommended. When Spin two-piece stainless steel flat roof drains are installed, the heating is always installed on the drain body (below the lower sealing level).

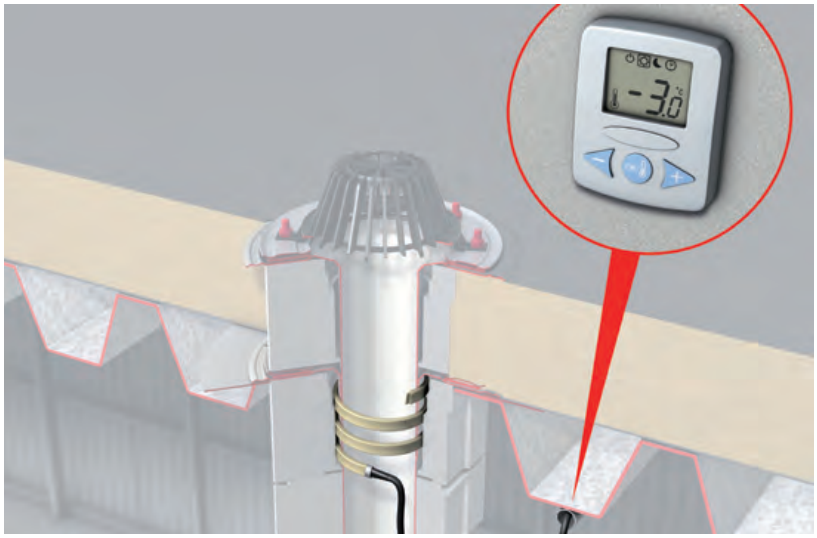

2-piece Spin flat roof drain with heating (Article No. 0174.84.32) and thermostat (not supplied)

Installing the sealing membrane
Bitumen membranes as well as high polymer sealing membranes can be connected to the Spin stainless steel flat roof drains by the compression sealing flange. One spacer below and one spacer above the sealing membrane must be put into place when connecting thin high polymer sealing membranes to the compression sealing flange. These spacers ensure that any unevenness in the fixed and loose flanges on the drain are compensated for to ensure that a watertight seal is created when the flanges are tightened up. The spacers can also be made on site from spare material from the same sealing membrane.

After placing the loose flange on top, the nuts must be tightened up one after the other with a torque.

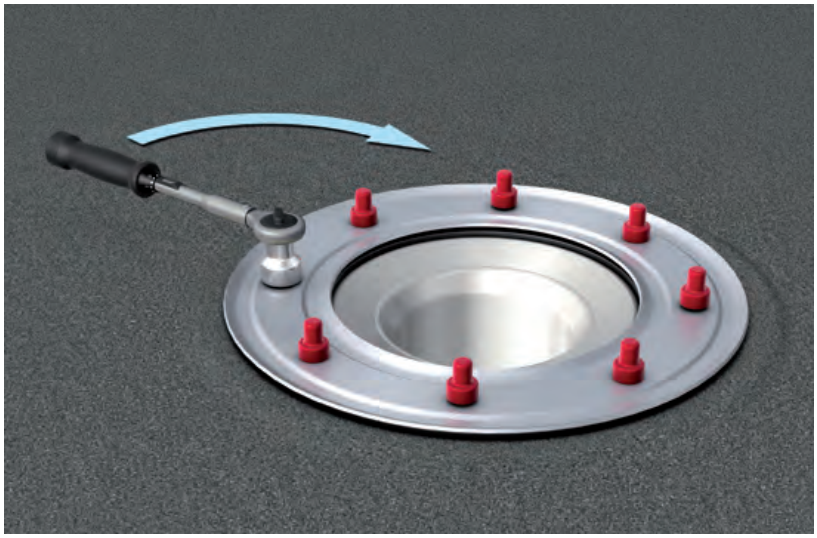

Two-piece drains, consisting of a drain body and a lower part
DIN 1986-100 stipulates that in the case of two-piece flat roof drains, there must be a tight seal between the drain body and the lower part. This ensures that the thermal insulation is not damaged by rainwater if the pipes become blocked.

The drain bodies for stainless steel flat roof drains are always supplied as standard with a sealing ring. This is installed between the drain body and the lower part.

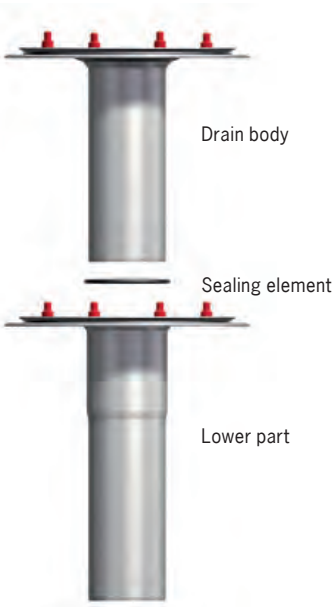

Pipe connections

ACO Spin flat roof drains made of stainless steel

Pipe type	With transition elements	Suitable for connection to
DN 70		
GM-X pipe with coupling socket	Direct connection	Spin flat roof drain made of stainless steel DN 70
Spigot pipe with no coupling socket	Connector fitting Article No. 0174.12.82	
HT pipe with coupling socket	Connector fitting Article No. 0174.12.95	
DN 100		
GM-X pipe with coupling socket	Direct connection	Spin flat roof drain made of stainless steel DN 100
Spigot pipe with no coupling socket	Connector fitting Article No. 0174.12.86	
HT pipe with coupling socket	Connector fitting Article No. 0174.12.98	
DN 125		
GM-X pipe with coupling socket	Direct connection	Spin flat roof drain made of stainless steel DN 125
Spigot pipe with no coupling socket	Direct connection	
HT pipe with coupling socket	Connector fitting Article No. 0174.13.00	

Contents
Gravity drainage
Syphonic drainage
Parking deck drainage
Balcony and terrace drainage
Facade drainage
Pipe systems

Installation example trapezoidal sheet metal roof

Gravity drainage with ACO Spin flat roof drain made of cast iron

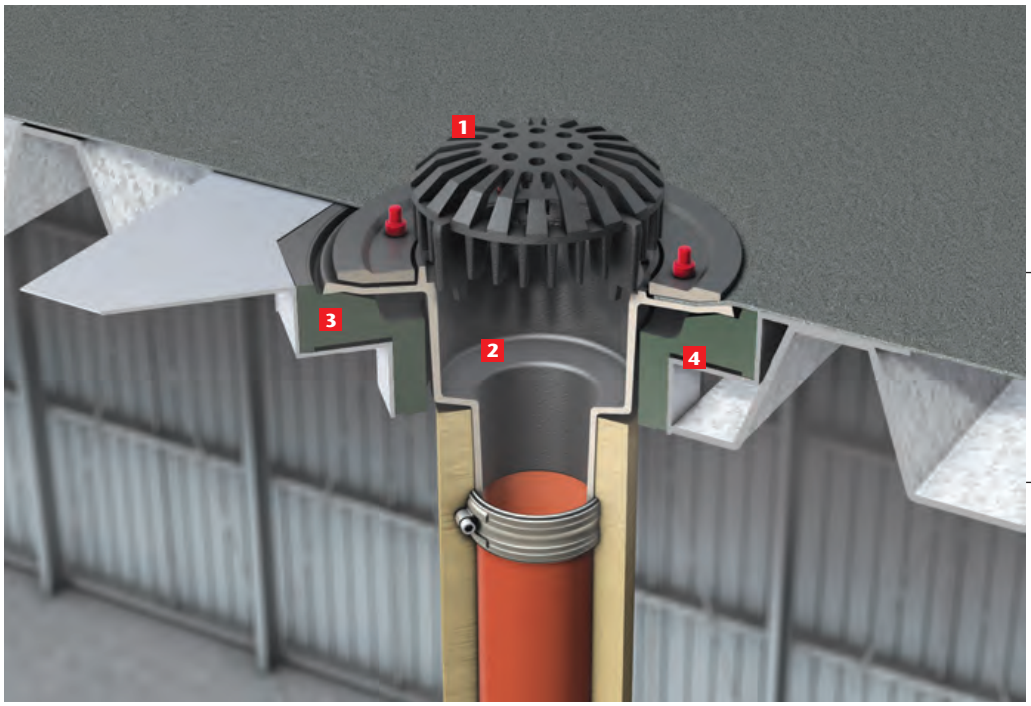

Sealing membrane

Trapezoidal sheet metal roof

1 Ball grating
Article No. 7000.10.00

2 Cast iron flat roof drain
DN 100, 90 °
Article No. 7034.10.10

3 Insulating mounting
Article No. 7040.21.00

4 Mounting sheet
Delivery details:
Covecta Vertrieb
Burgsteige 35
73326 Deggingen
Germany
Tel. +49 (0) 7334 8012

DN 70	DN 100–DN 150
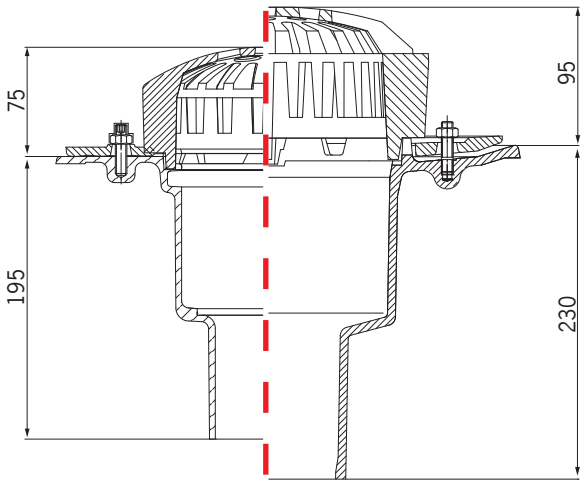	
The outlet socket of the drain body can be shortened on site by max. 44 mm.	The outlet socket of the drain body can be shortened on site by max. 35 mm.

Extension heights in mm

Installation example in a warm roof

Gravity drainage with ACO Spin flat roof drain made of cast iron

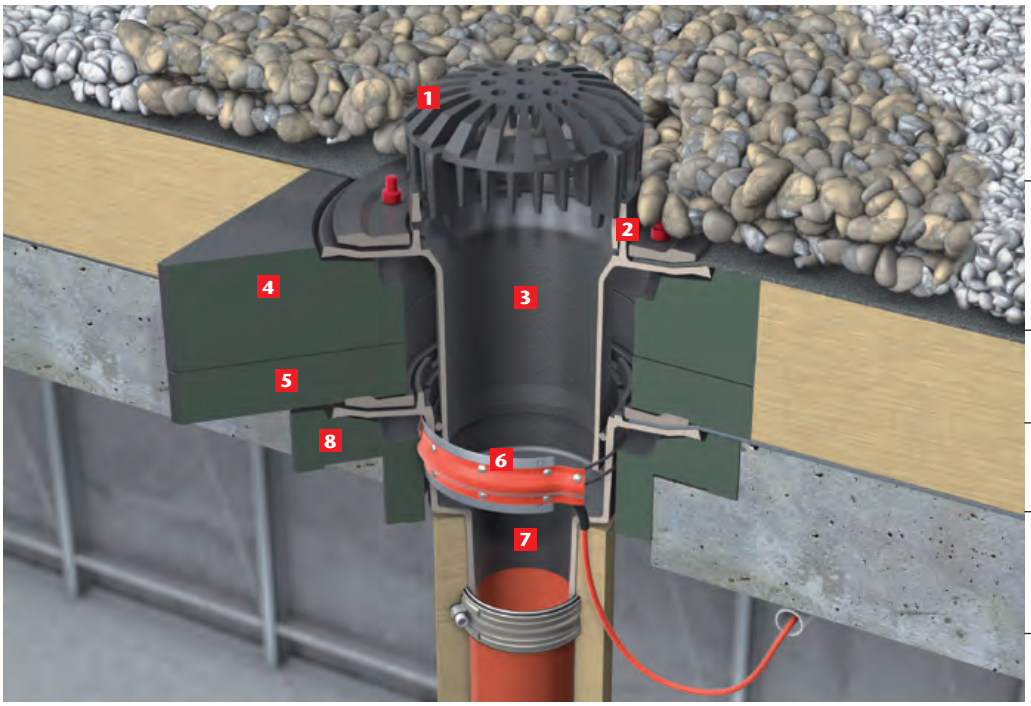

Gravel layer

Sealing membrane

Insulation

Sealing membrane (vapour seal)

Ceiling (thickness according to the structural engineering specifications)

1 Ball grating
Article No. 7000.10.00

2 Top ring
Article No. 7000.35.00

3 Upper part
Article No. 7044.10.25

4 Insulating ring
Article No. 7040.11.00

5 Levelling element
Article No. 7040.01.00

6 Heating
Article No. 7000.85.00

7 Cast iron flat roof drain
DN 100, 90°
Article No. 7034.10.10

8 Insulating mounting
Article No. 7040.21.00

DN 70	DN 100–DN 150
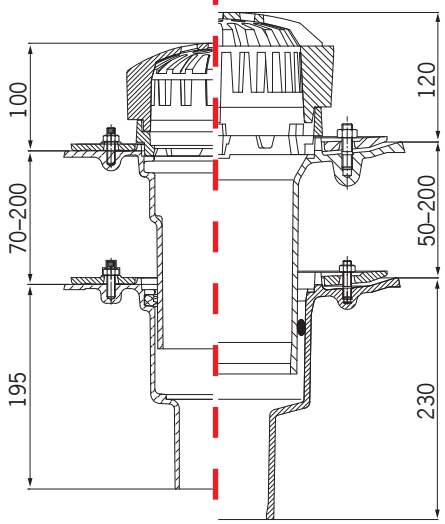	
The outlet socket of the drain body can be shortened on site by max. 44 mm.	The outlet socket of the drain body can be shortened on site by max. 35 mm.

Extension heights in mm

Contents
Gravity drainage
Syphonic drainage
Parking deck drainage
Balcony and terrace drainage
Facade drainage
Pipe systems

Installation example green roof (extensive greening)

Gravity drainage with ACO Spin flat roof drain made of cast iron

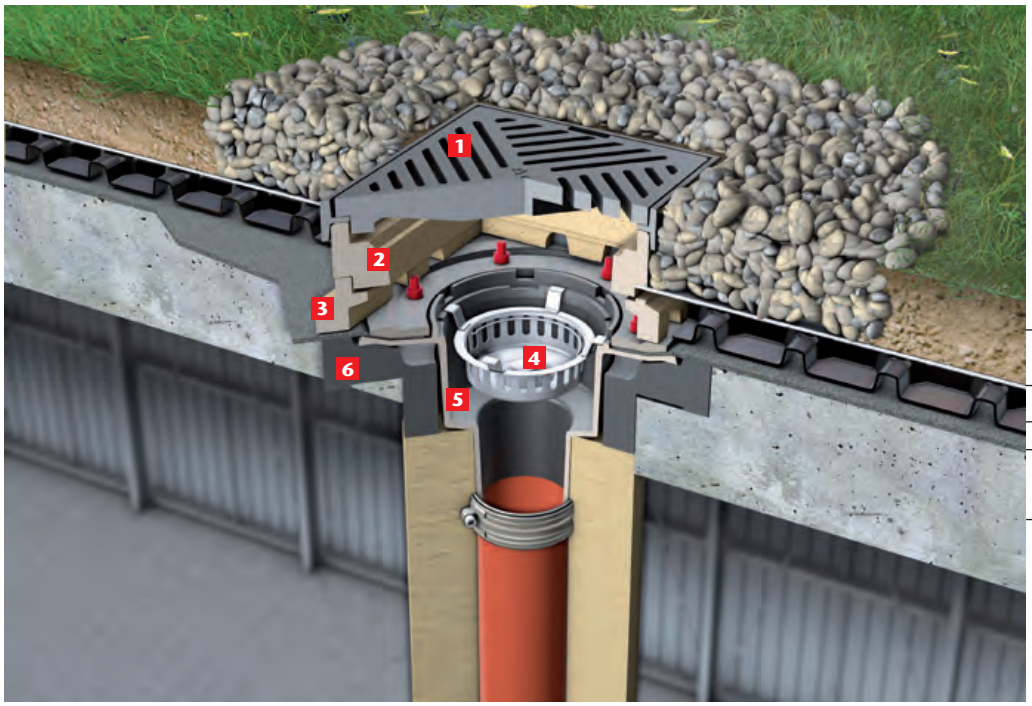

Soil
Filter fleece
Drain layer
Sealing membrane
Ceiling (thickness according to the structural engineering specifications)

1 Frame with cast iron grating
Article No. 7000.51.00

2 Spacer
Article No. 7000.52.00

3 Transition frame
Article No. 7000.55.00

4 Stainless steel bucket
Article No. 7000.13.00

5 Cast iron flat roof drain
DN 100, 90 °
Article No. 7034.10.10

6 Insulating mounting
Article No. 7040.21.00

DN 70	DN 100–DN 150
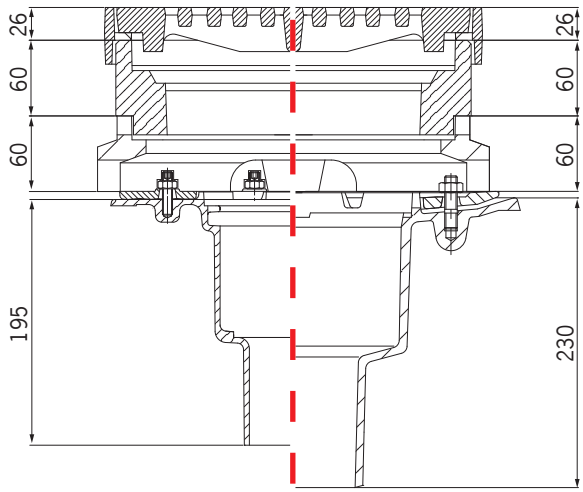	
The outlet socket of the drain body can be shortened on site by max. 44 mm.	The outlet socket of the drain body can be shortened on site by max. 35 mm.

Extension heights in mm

Installation example green roof (intensive greening)

Gravity drainage with ACO Spin flat roof drain made of cast iron

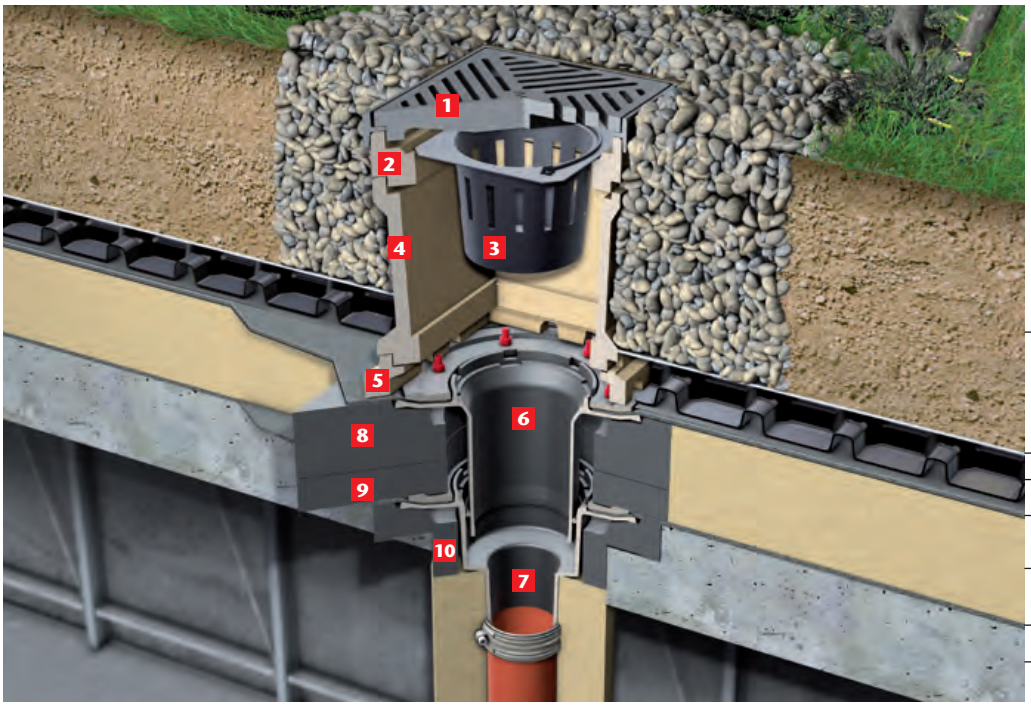

Soil
Filter fleece
Drainage layer
Sealing membrane
Insulation
Damp proof membrane
Ceiling (thickness according to the structural engineering specifications)

1 Frame with cast iron grating
Article No. 7000.51.00

Intermediate section
2 Article No. 7000.52.00
4 Article No. 7000.54.00

3 Bucket
Article No. 7000.53.00

5 Adapter frame
Article No. 7000.55.00

6 Upper part
Article No. 7044.10.25

7 Cast iron flat roof drain
DN 100, 90°
Article No. 7034.10.10

8 Insulating ring
Article No. 7040.11.00

9 Levelling element
Article No. 7040.01.00

10 Insulating mounting
Article No. 7040.21.00

DN 70	DN 100–DN 150

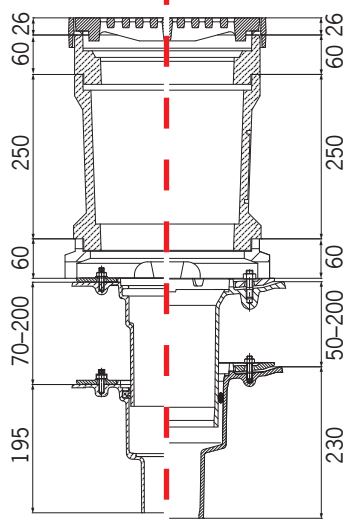

Additional spacers (Article No. 7000.54.00) height: 250 mm, can be stacked on top of one another to match the thickness of the soil on green roofs.

Extension heights in mm

Contents
Gravity drainage
Syphonic drainage
Parking deck drainage
Balcony and terrace drainage
Facade drainage
Pipe systems

Installation example concrete ceiling with fire protection

Gravity drainage with ACO Spin flat roof drain made of stainless steel

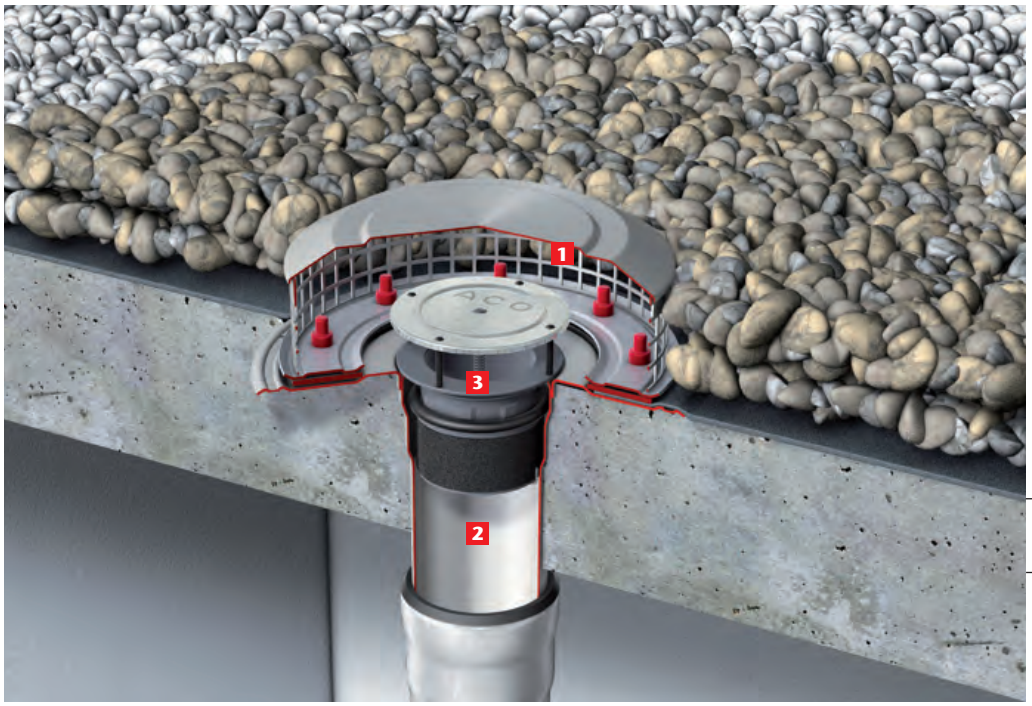

Sealing membrane

Ceiling (thickness according to the structural engineering specifications)

Complete drain Article No. 1119.10.60 consisting of:

1 Stainless steel gravel basket
Article No. 0174.46.59

2 Stainless steel flat roof drain
DN 100, 90°
Article No. 0174.47.16

Accessories:
3 Fire protection insert
Article No. 7034.20.15
Warning: Only use a stainless steel gravel basket when installing a fire protection insert!

DN 70–DN 125	
Plastic gravel basket	Stainless steel gravel basket

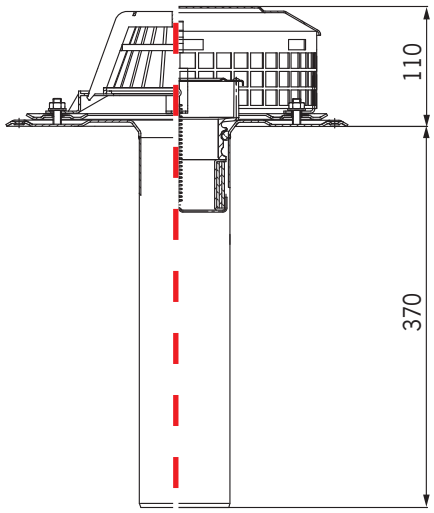

The extension height of 110 mm is the same for the stainless steel gravel basket (shown on the right of the diagram) and the plastic gravel basket (shown on the left of the diagram). Attention! The fire protection insert is only available for the vertical Spin flat roof drain DN 100.

Extension heights in mm

Installation example trapezoidal sheet metal roof with insulation

Gravity drainage with ACO Spin flat roof drain made of stainless steel

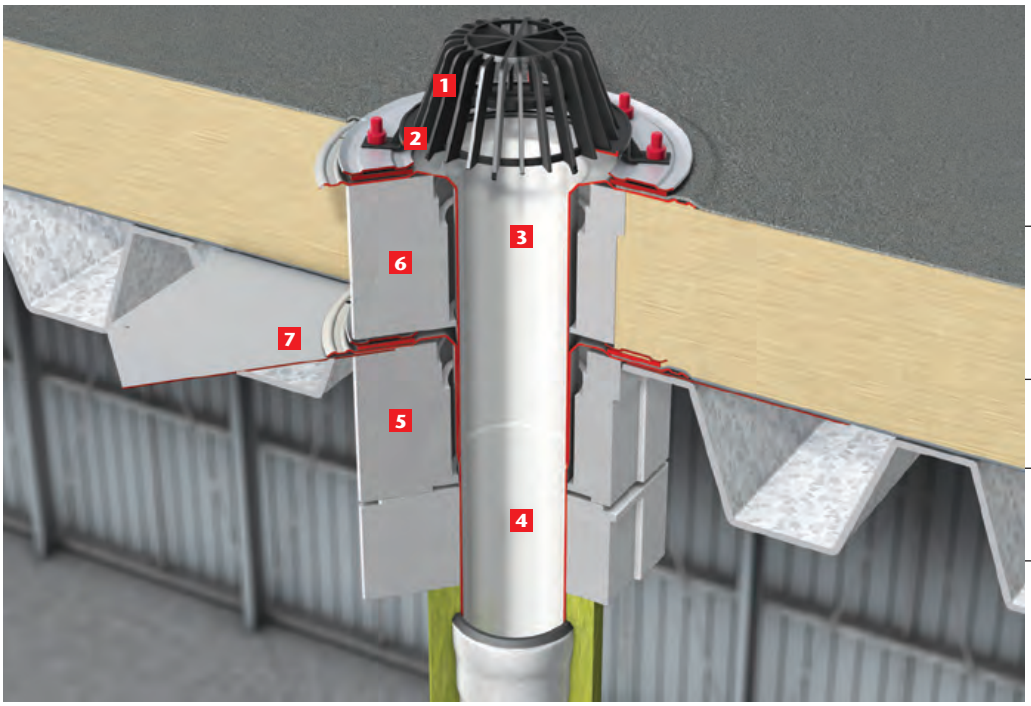

Sealing membrane

Insulation

Sealing membrane
(Damp proof membrane)

Trapezoidal sheet metal roof

Complete drain Article No. 1119.25.10 consisting of:

1 Plastic gravel basket
Article No. 0174.46.66

2 Fastening frame for gravel basket
Article No. 0174.46.67

3 Upper part DN 100
Article No. 0174.47.31

4 Lower part for flat roof drain DN 100, 90°
Article No. 0174.47.16

5 Polystyrene insulation DN 100
Article No. 0174.47.19

Accessories:

6 Polystyrene insulation DN 100
Article No. 0174.47.19

7 Mounting sheet
Article No. 0174.46.61

DN 70	DN 125 – DN 150
Plastic gravel basket	Stainless steel gravel basket

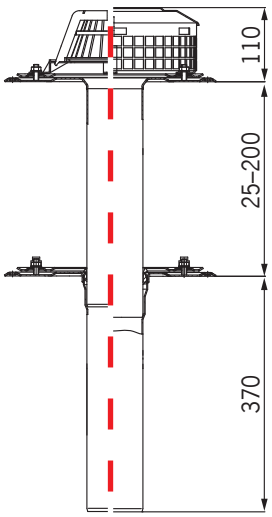

The extension height of 110 mm is the same for the stainless steel gravel basket (shown on the right of the diagram) and the plastic gravel basket (shown on the left of the diagram).

Extension heights in mm

Contents
Gravity drainage
Syphonic drainage
Parking deck drainage
Balcony and terrace drainage
Facade drainage
Pipe systems

Modular system

ACO Spin flat roof drain DN 70 made of cast iron for gravity drainage

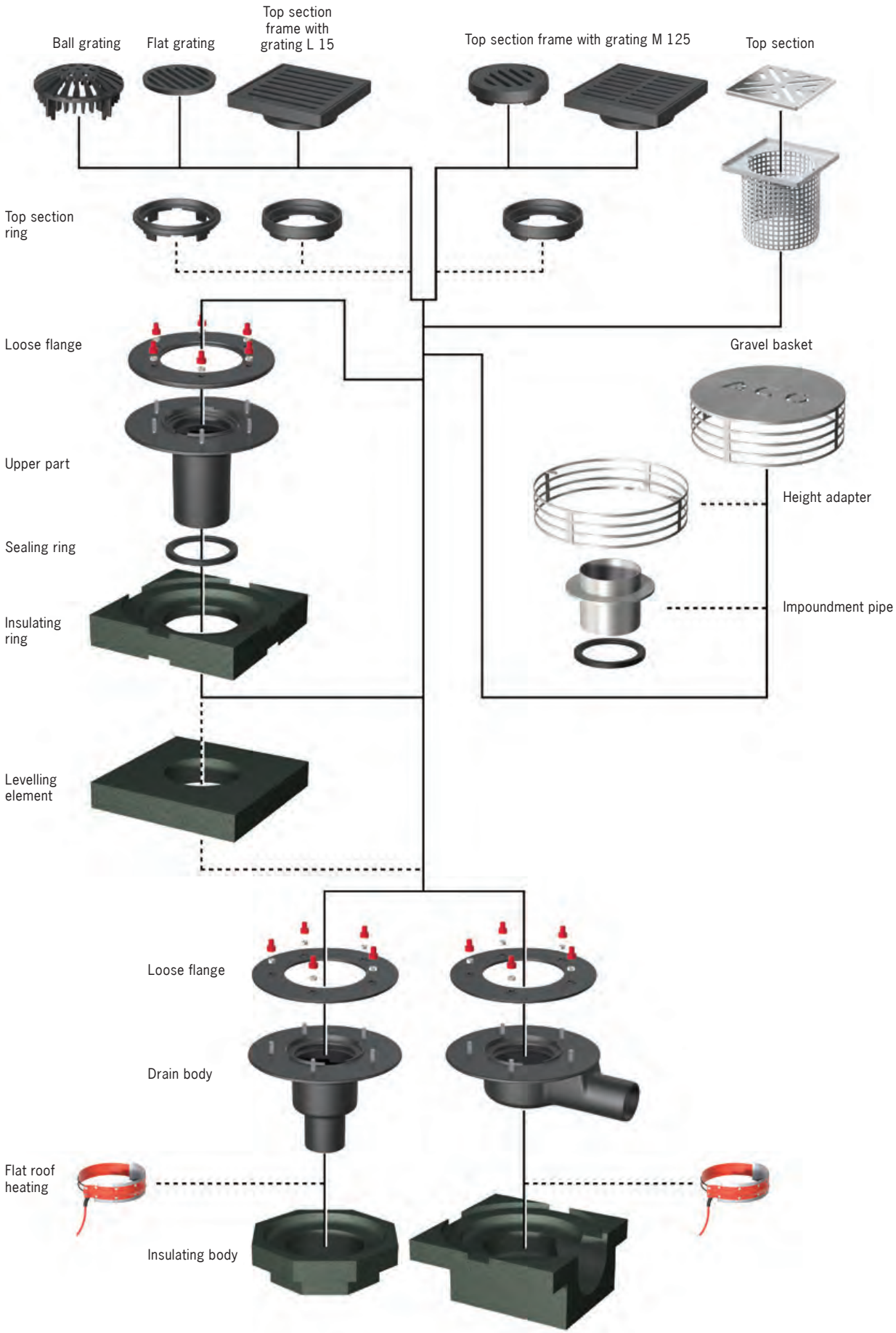

ACO Spin flat roof drain made of cast iron

DN 70/DN 80

- Drain body DN 70 – DN 80 pursuant to DIN EN 1253
- Cast iron, construction material class A1, coated
- With compression sealing flange and seepage openings
- Can be connected to spigot pipe pursuant to DIN 19522 / DIN EN 877
- Weight approx. 7.5 kg

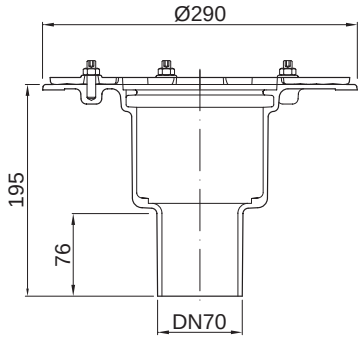

Model with vertical outlet socket

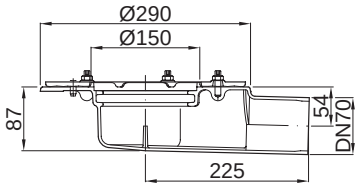

Model with horizontal outlet socket

Model	Weight	Article No.
With vertical outlet socket	7,4	**5169.20.00**
With horizontal outlet socket	7,7	**5169.40.00**

Core borehole dimensions

Nominal width	Ø a	Ø c	b [mm]	Article No.
For drain body without insulating body				
DN 70	300	150	30	**5169.20.00**
For drain body with insulating body				
DN 70	315	220	45	**5169.20.00**

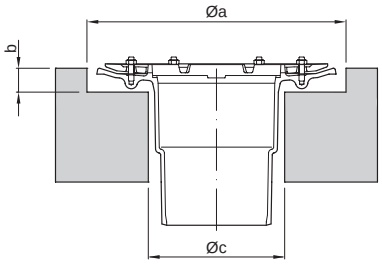

Recess dimensions

Nominal width	Type	Outlet inclination	Article No.	Recess dimensions Drain body without insulating body	Recess dimensions Drain body with insulating body
DN 70	Spin	1,5°	**5169.40.00**	230 x 530 mm	320 x 530 mm
DN 70	Spin	90°	**5169.20.00**	230 x 320 mm	320 x 320 mm

Contents
Gravity drainage
Syphonic drainage
Parking deck drainage
Balcony and terrace drainage
Facade drainage
Pipe systems

Extension components

ACO Spin flat roof drain DN 70/DN 80 made of cast iron

	Scale drawing	Product description	Model	Article No.
	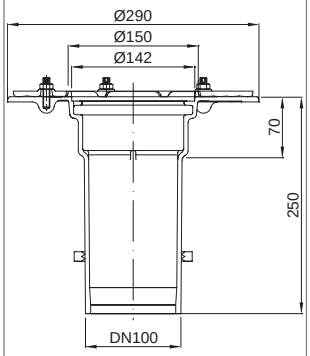	**Upper part** Cast iron, DN 70 for sealing with two sealing membranes, with compression sealing flange, seepage openings and sealing ring	Coated	**7047.10.25**
	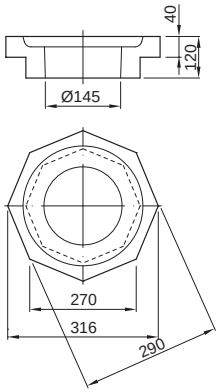	**Insulating body** For flat roof drain with vertical outlet socket, made of foam glass		**7040.22.00**
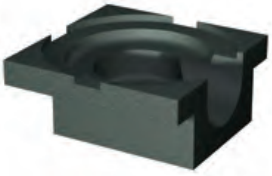	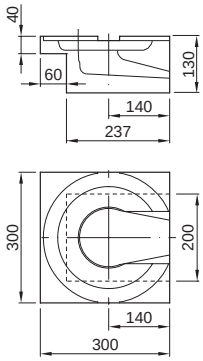	**Insulating body** For flat roof drain with lateral outlet socket, made of foam glass		**7040.34.00**
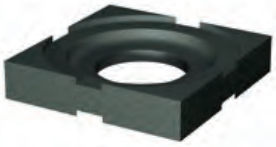	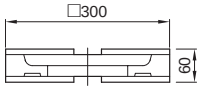	**Insulating ring** For upper part of flat roof drain DN 70, made of foam glass		**7040.12.00**
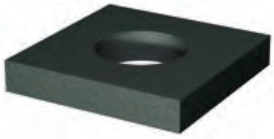	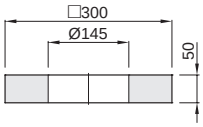	**Levelling element** For upper part of flat roof drain, DN 70, made of foam glass		**7040.02.00**

	Scale drawing	Product description	Model	Article No.
	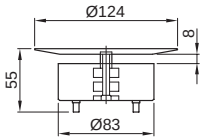	**Bucket** Stainless steel, material 1.4301, fits cast iron flat roof drain DN 70		**7000.03.00**
	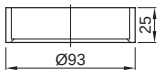	**Hose element** DN 70/80 For connecting DN 70 floor drains to spigot pipe DN 80		**5170.70.80**
		**Flat roof heating** Suitable for all flat roof drains DN 50 – DN 150, Electrical supply: 220-240 V AC, Nominal power: 25 W, Protection class: I, Protection type: IP 67, Connecting cable: SIHF 3 x 1 mm^2, 1.5 m G 1.5		**7000.85.00**
	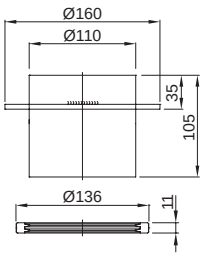	**Impoundment pipe** 35 mm high, for one-piece and two-piece drains		**7033.10.50**

Contents
Gravity drainage
Syphonic drainage
Parking deck drainage
Balcony and terrace drainage
Facade drainage
Pipe systems

Top sections, gratings and top frames

ACO Spin flat roof drain DN 70/DN 80 made of cast iron

	Scale drawing	Product description	Model	Article No.
	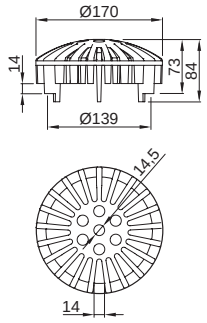	**Ball grating** cast iron, fits all Spin flat roof drains DN 70, external dimensions: Ø 170 mm	Class H1,5	**7000.09.00**
	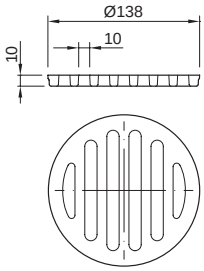	**Flat grating** cast iron, fits all Spin flat roof drains DN 70, External dimensions: Ø 138 mm	Class L15	**7000.19.00**
	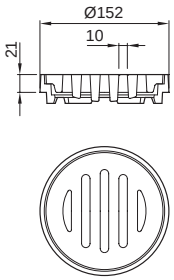	**Grating** cast iron, fits all Spin flat roof drains DN 70, external dimensions: Ø 152 mm	Class M125	**7000.08.00**
	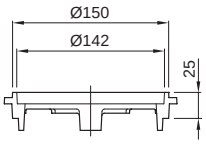	**Top ring** Cast iron, fits gratings with Article Nos. 7000.09.00 7000.19.00 7000.43.00	Class L15	**7000.06.00**
	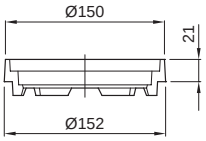	**Top ring** Cast iron, fits grating with Article No. 7000.08.00 7000.44.00	Class M125	**7000.05.00**
	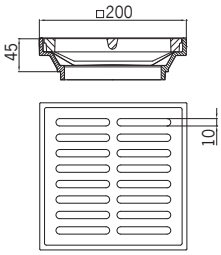	**Top frame with grating** cast iron	Class L15 Class M125	**7000.43.00** **7000.44.00**

	Scale drawing	Product description	Model	Article No.
	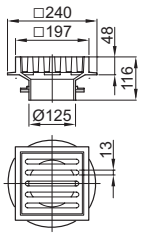	**Top section** cast iron, frame dimensions: □ 197 mm, top section and frame, cast iron, slotted cast iron grating	Class M125	**5141.83.00**
	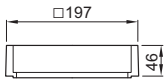	**Top frame** cast iron, fits top section Article No. 5141.83.00	Class M125	**5095.80.00**
	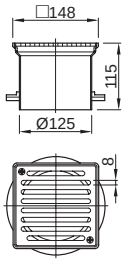	**Top section stainless steel,** with slotted frame stainless steel, threaded, class K3, frame dimensions: □ 148 mm	With anti-slip surface Without anti-slip surface	**5141.89.00** **5141.89.11**
	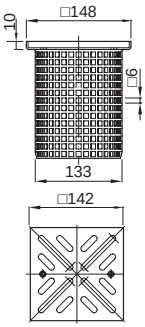	**Top section with sieve holes** frame dimensions: □ 148 mm stainless steel top section and slotted lid	Height adjustability: 35–130 mm 35–225 mm	 **0154.55.78** **0154.83.39**

Contents
Gravity drainage
Syphonic drainage
Parking deck drainage
Balcony and terrace drainage
Facade drainage
Pipe systems

Modular system

ACO Spin flat roof drain DN 100 – DN 150 made of cast iron for gravity drainage

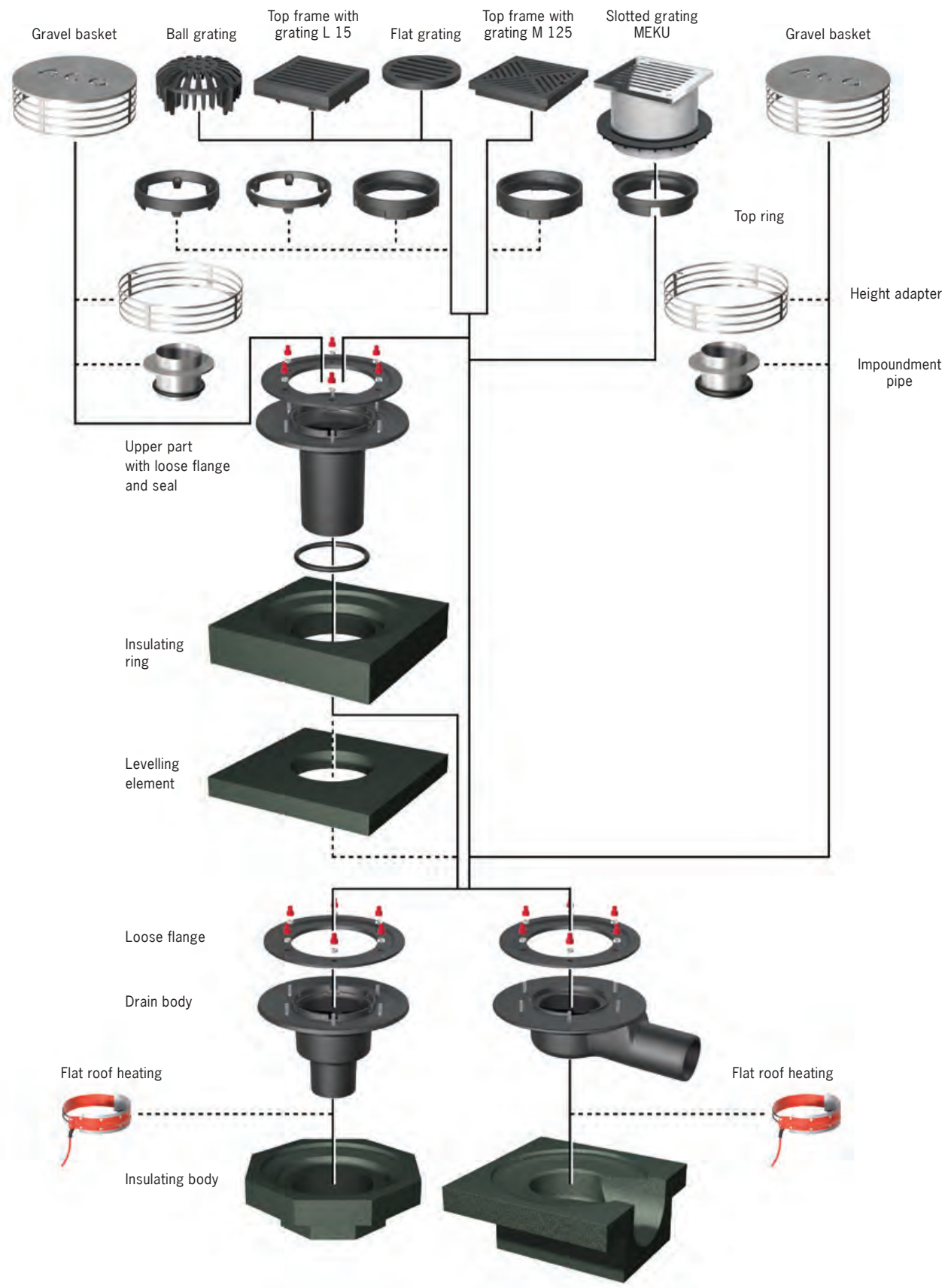

ACO Spin flat roof drain made of cast iron

DN 100 – DN 150

- Drain body DN 100 – DN 150 pursuant to DIN EN 1253
- Cast iron, construction material class A1, coated
- With compression sealing flange and seepage openings
- Can be connected to spigot pipe pursuant to DIN 19522 / DIN EN 877

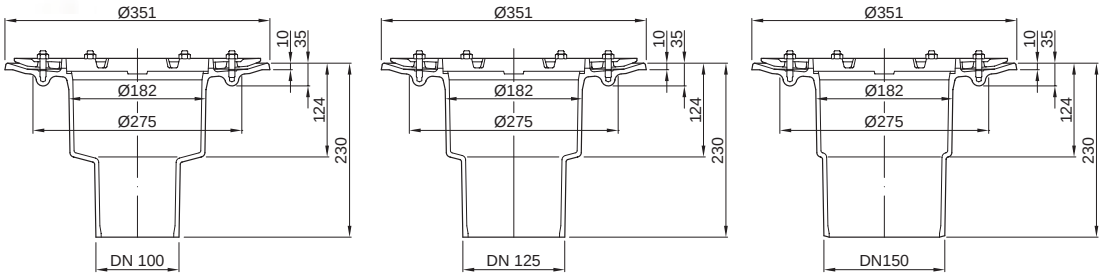

With vertical outlet socket			
Nominal width	DN 100	DN 125	DN 150
Weight	13.1 kg	13.6 kg	14.4 kg
Article No.	**7034.10.10**	**7035.10.10**	**7036.10.10**

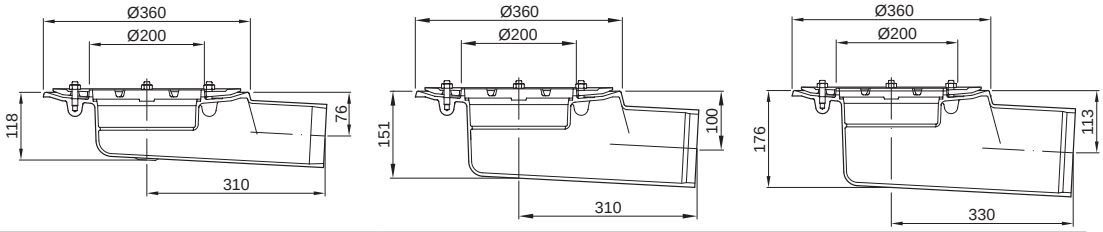

With horizontal outlet socket			
Nominal width	DN 100	DN 125	DN 150
Weight	15.2 kg	15.7 kg	18.2 kg
Article No.	**7054.11.10**	**7055.11.10**	**7056.11.10**

Core borehole dimensions

Nominal width	Ø a	Ø c	b [mm]	Article No.
For drain body without insulating body				
DN 100	380	200	35	**7034.10.10**
DN 125	380	200	35	**7035.10.10**
DN 150	380	200	35	**7036.10.10**
For drain body with insulating body				
DN 100	430	270	65	**7034.10.10**
DN 125	430	270	65	**7035.10.10**
DN 150	430	270	65	**7036.10.10**

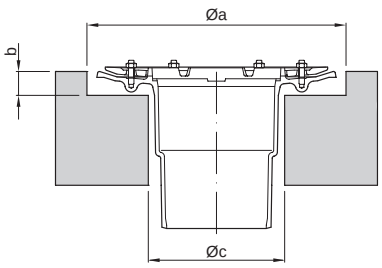

Recess dimensions

Nominal width	Type	Outlet inclination	Article No.	Recess dimensions Drain body without insulating body	Recess dimensions Drain body with insulating body
DN 100	Spin	1.5°	**7054.11.10**	290 x 670 mm	500 x 670 mm
DN 125	Spin	1.5°	**7055.11.10**	290 x 700 mm	500 x 700 mm
DN 150	Spin	1.5°	**7056.11.10**	290 x 750 mm	500 x 750 mm
DN 100	Spin	90°	**7034.10.10**	290 x 410 mm	450 x 450 mm
DN 125	Spin	90°	**7035.10.10**	290 x 410 mm	450 x 450 mm
DN 150	Spin	90°	**7036.10.10**	290 x 410 mm	450 x 450 mm

Contents
Gravity drainage
Syphonic drainage
Parking deck drainage
Balcony and terrace drainage
Facade drainage
Pipe systems

Additional components

ACO Spin flat roof drain DN 100 – DN 150 made of cast iron

	Scale drawing	Product description	Model	Article No.
	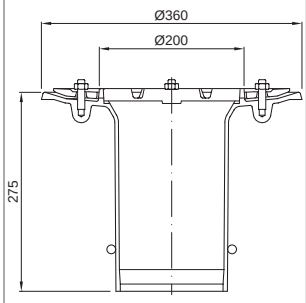	**Upper part** cast iron, DN 100-DN 150 for sealing with two sealing membranes, with compression sealing flange, seepage openings and sealing ring	Coated	**7044.10.25**
	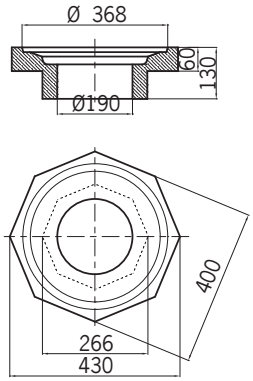	**Insulating body** for flat roof drain with vertical outlet socket, foam glass		**7040.21.00**
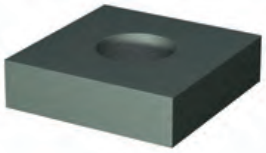	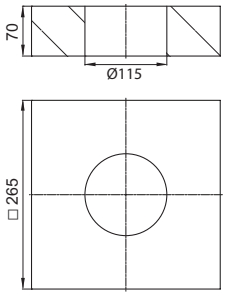	**Isolating plate** foam glass 265 x 265 mm for Spin flat roof drain DN 100 – DN 150 made of cast iron with insulation and fire protection		**7040.23.00**
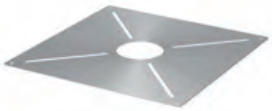	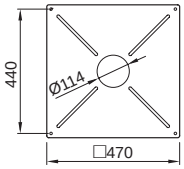	**Heat shield** with impact dowels M 8 x 16 for Spin flat roof drain DN 100 made of cast iron or stainless steel with insulation and fire protection		**7034.20.17**
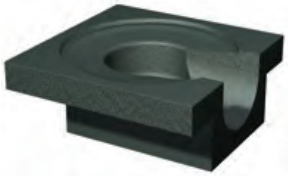	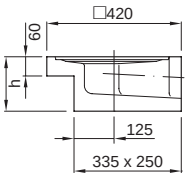	**Insulating body** for flat roof drain with horizontal outlet socket, foam glass	DN 100, height: 170 mm DN 125, height: 215 mm DN 150, Höhe: 240 mm height	**7040.31.00** **7040.32.00** **7040.33.00**

	Scale drawing	Product description	Model	Article No.
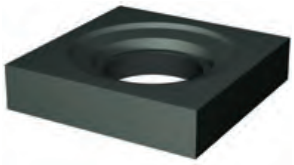	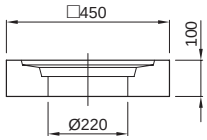	**Insulating ring** for flat roof drain upper part DN 100 – DN 150, foam glass		**7040.11.00**
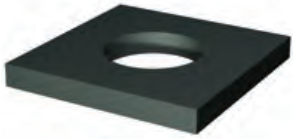	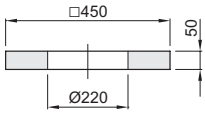	**levelling element** for flat roof upper part DN 100 – DN 150, foam glass		**7040.01.00**
	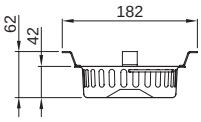	**Bucket** stainless steel, material 1.4301, fits flat roof drain DN 100 – DN 150 made of cast iron		**7000.13.00**
		**Flat roof heating** Suitable for all flat roof drains DN 50 – DN 150, Electrical supply: 220-240 V AC, Nominal power: 25 W, Protection class: I, Protection type: IP 67, Connecting cable: SIHF 3 x 1 mm^2, 1.5 m G 1.5		**7000.85.00**
	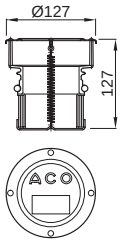	**Fire protection insert** fits Spin flat roof drain DN 100 with 90° outlet inclination. Warning! Outflow performance reduced by the insert!		**7034.20.15**

Contents
Gravity drainage
Syphonic drainage
Parking deck drainage
Balcony and terrace drainage
Facade drainage
Pipe systems

Top sections, gratings and top frames

ACO Spin flat roof drains DN 100 – DN 150 made of cast iron

	Scale drawing	Product description	Model	Article No.
	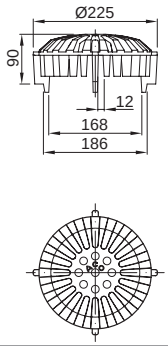	**Ball grating** cast iron, fits all Spin flat roof drains DN 100 – DN 150, external dimensions: Ø 225 mm	Class H1,5	**7000.10.00**
	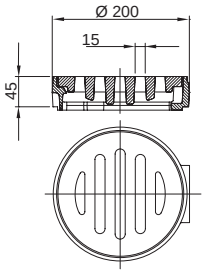	**Stacking frame with grating** from cast iron, suitable for all flat roof drains Spin DN 100 – DN 150 without insulation, outer diameter: Ø 200 mm	Class M125	**7000.28.00**
	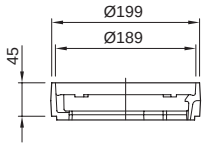	**Top ring** cast iron, fits Article No. 7000.46.00 7000.28.00 7000.41.00 7000.42.00	Class M125	**7000.45.00**
	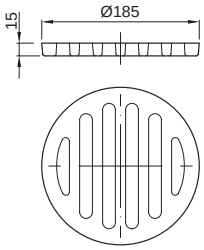	**Flat grating** cast iron, fits all Spin flat roof drains DN 100 – DN 150, external dimensions: Ø 185 mm	Class L15	**7000.20.00**
	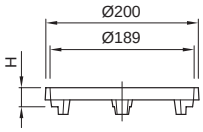	**Top ring** cast iron, fits Article Nos. 7000.10.00, 7000.20.00, 7000.39.00 and 7000.40.00	Height: 25 mm Height: 35 mm	**7000.25.00** **7000.35.00**
	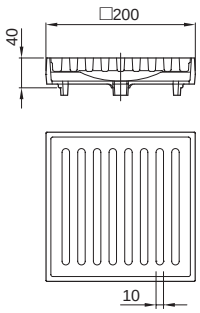	**Top frame** cast iron, with slotted grating Frame dimensions: □ 200 x 200 mm	Class L15	**7000.40.00**

	Scale drawing	Product description	Model	Article No.
	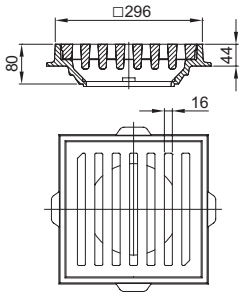	**Top frame** cast iron, with slotted grating Frame dimensions: □ 296 mm	Class M125, unbolted bolted	 **7000.41.00** **7000.42.00**
	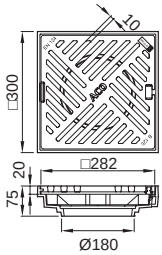	**Top frame** with boltless locking, cast iron, with slotted grating Frame dimensions: □ 300 x 300 mm	Class M125, locked	**7000.46.00**
	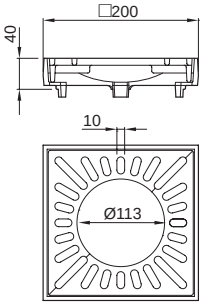	**Top frame** cast iron, with slotted grating, Frame dimensions: □ 200 x 200 mm	Class L15	**7000.39.00**
	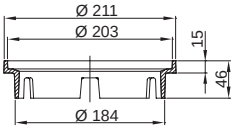	**Transition ring** cast iron, fits top section Article No. 5084.81.00 Build height: 24 mm	Class K3	**7000.31.00**
	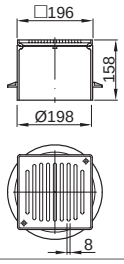	**MEKU top section** frame dimensions: □ 196 mm, plastic top section,frame and slotted grating made of stainless steel Transition ring required (previous Article No.)	Class K3, bolted	**5084.81.00**
	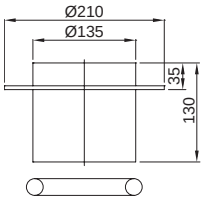	**Impoundment pipe** made of CrNi, material 1.4301, with a sealing ring for Spin flat roof drains made of cast iron	35 mm, DN 100, one-piece 35 mm, DN 100, two-piece 45 mm, DN 125/DN150, one-piece 45 mm, DN 125/150, two-piece	**7034.10.50** **7044.10.50** **7035.10.50** **7045.10.50**

Contents
Gravity drainage
Syphonic drainage
Parking deck drainage
Balcony and terrace drainage
Facade drainage
Pipe systems

Green roof / Parking deck top sections

ACO Spin flat roof drain DN 70 – DN 150 made of cast iron

	Scale drawing	Product description	Model	Article No.
	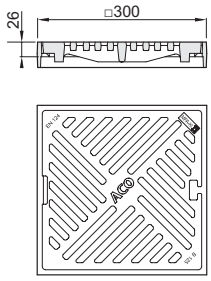	**Frame with slotted grating** with boltless locking, cast iron, coated, frame dimensions: ☐ 300 mm	Class L15/M125	**7000.51.00**
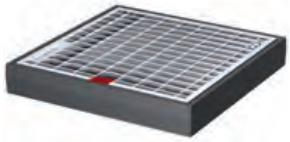	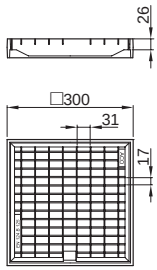	**Frame with slotted grating** with adjustment, steel, galvanised, lattice dimensions 31 x 17 mm, frame dimensions: ☐ 300 mm	Class L15/M125	**7000.50.00**
	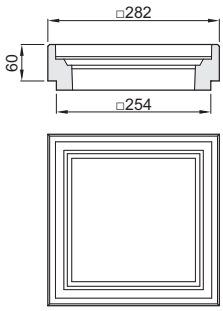	**Intermediate sections** polymer concrete, height: 60 mm	Class L15/M125	**7000.52.00**
	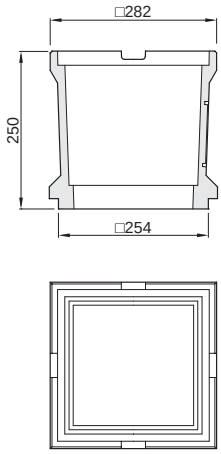	**Intermediate section** polymer concrete, height: 250 mm	Class L15/M125	**7000.54.00**

	Scale drawing	Product description	Model	Article No.
	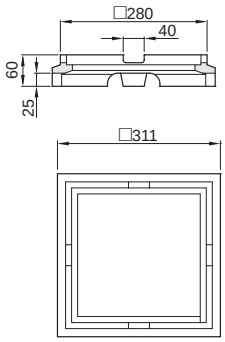	**Adapter frame** polymer concrete height: 60 mm	Class L15	**7000.55.00**
	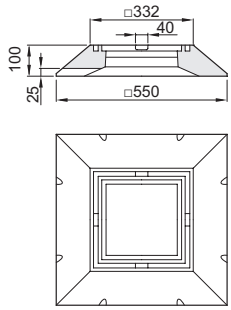	**Adapter frame** polymer concrete height: 100 mm	Class M125	**7000.56.00**
	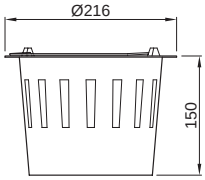	**Bucket** polypropylene for top sections min 180 mm in combination with Article No. 7000.50.00 and 7000.51.00		**7000.53.00**
	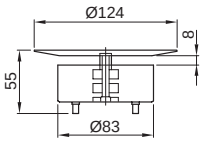	**Bucket** Stainless steel for top sections up to 180 mm, for flat roof drains DN 70		**7000.03.00**
	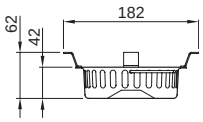	**Bucket** stainless steel, for top sections up to 180 mm, for flat roof drains DN 100 – DN 150		**7000.13.00**

Contents
Gravity drainage
Syphonic drainage
Parking deck drainage
Balcony and terrace drainage
Facade drainage
Pipe systems

Modular system

ACO Spin flat roof drains made of stainless steel for gravity drainage

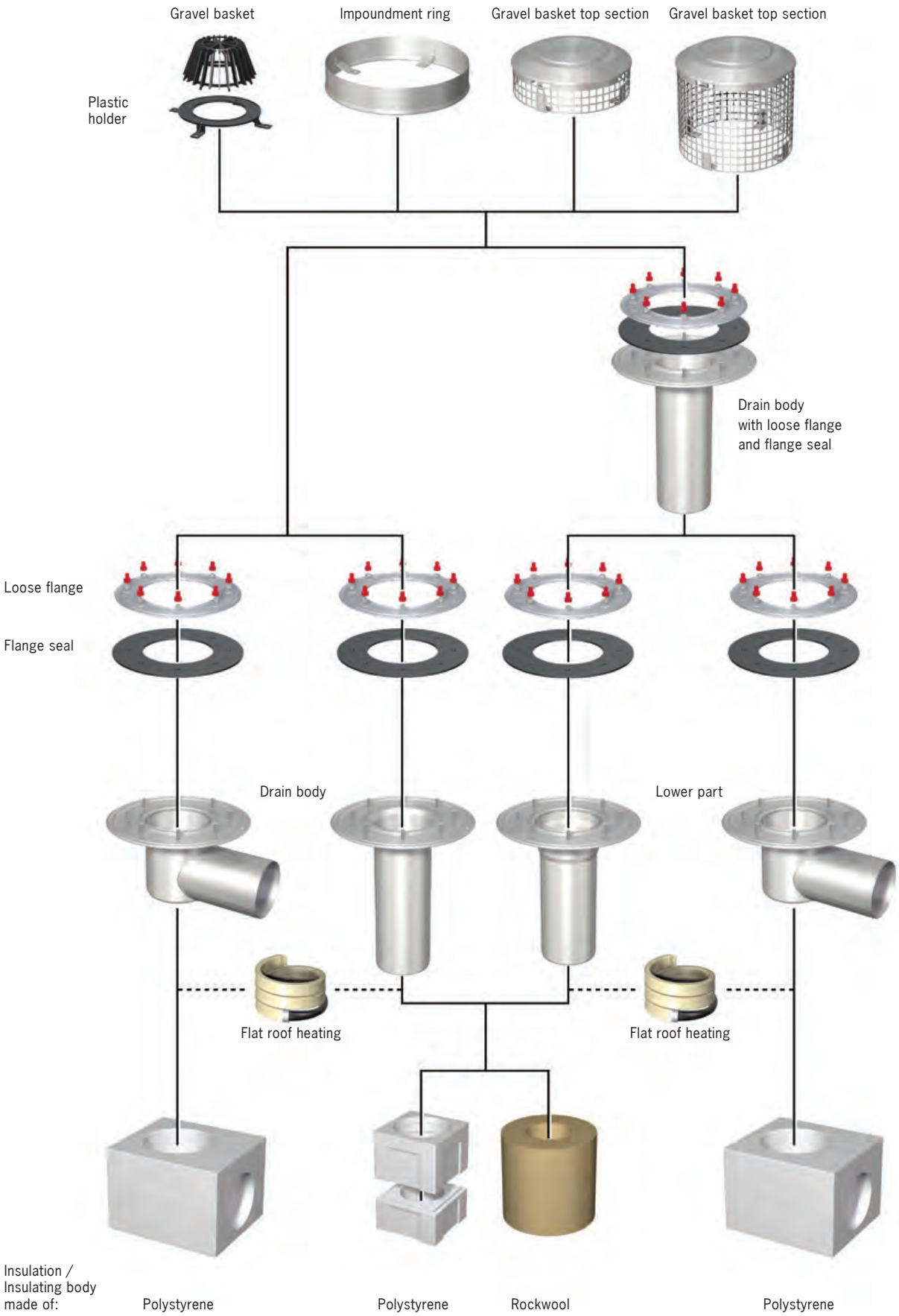

ACO Spin flat roof drains made of stainless steel with vertical outlet socket

DN 70 – DN 125

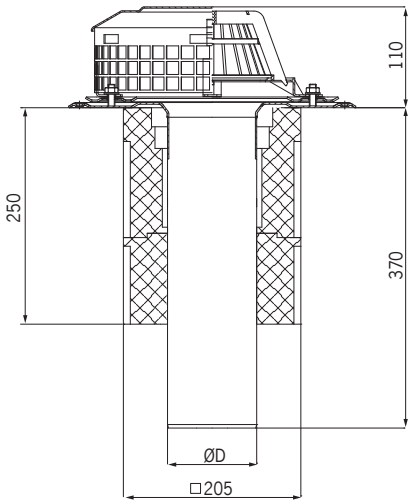

- Flat roof drain DN 70 – DN 125 with vertical outlet socket pursuant to DIN EN 1253
- Stainless steel, material 1.4301
- With compression sealing flange for sealing one sealing membrane
  Warning! It is NOT possible to install a second sealing membrane after the vertical drain has been installed!
- Sarnafil TG 66-15
  - for loose placement
  - for greened, gravelled roofs with foot and vehicle traffic
  - for roofs with additional loads
- Sikaplan 15 G
  - for loose placement with mechanical fixing
  - up to a roof gradient of maximum 20%
  - for roofs without additional loads

Nominal Width	Model	D [mm]	Stainless steel gravel basket				Plastic gravel basket			
			Weight [kg]	without ceiling membrane Article No.	Sarnafil TG 66-15 Article No.	Sikaplan 15 G Article No.	Weight [kg]	without ceiling membrane Article No.	Sarnafil TG 66-15 Article No.	Sikaplan 15 G Article No.
DN 70	uninsulated	73	4.5	**1179.10.60**	**1179.10.62**	**1179.10.67**	3.7	**1179.10.10**	**1179.10.12**	**1179.10.17**
	polystyrene	73	4.7	**1179.15.60**	**1179.15.62**	**1179.15.67**	3.9	**1179.15.10**	**1179.15.12**	**1179.15.17**
	rock wool	73	4.7	**1179.17.60**	**1179.17.62**	**1179.17.67**	3.9	**1179.17.10**	**1179.17.12**	**1179.17.17**
	polystyrene, heated	73	4.9	**1179.15.90**	**1179.15.92**	**1179.15.97**	4.1	**1179.15.40**	**1179.15.42**	**1179.15.47**
	rock wool, heated	73	4.9	**1179.17.90**	**1179.17.92**	**1179.17.97**	4.1	**1179.17.40**	**1179.17.42**	**1179.17.47**
DN 100	uninsulated	103	4.9	**1119.10.60**	**1119.10.62**	**1119.10.67**	4.1	**1119.10.10**	**1119.10.12**	**1119.10.17**
	polystyrene	103	5.0	**1119.15.60**	**1119.15.62**	**1119.15.67**	4.2	**1119.15.10**	**1119.15.12**	**1119.15.17**
	rock wool	103	5.0	**1119.17.60**	**1119.17.62**	**1119.17.67**	4.2	**1119.17.10**	**1119.17.12**	**1119.17.17**
	polystyrene, heated	103	5.2	**1119.15.90**	**1119.15.92**	**1119.15.97**	4.4	**1119.15.40**	**1119.15.42**	**1119.15.47**
	rock wool, heated	103	5.2	**1119.17.90**	**1119.17.92**	**1119.17.97**	4.4	**1119.17.40**	**1119.17.42**	**1119.17.47**
DN 125	uninsulated	133	5.9	**1129.10.60**	**1129.10.62**	**1129.10.67**	5.1	**1129.10.10**	**1129.10.12**	**1129.10.17**
	polystyrene	133	6.0	**1129.15.60**	**1129.15.62**	**1129.15.67**	5.2	**1129.15.10**	**1129.15.12**	**1129.15.17**
	rock wool	133	6.0	**1129.17.60**	**1129.17.62**	**1129.17.67**	5.2	**1129.17.10**	**1129.17.12**	**1129.17.17**
	polystyrene, heated	133	6.2	**1129.15.90**	**1129.15.92**	**1129.15.97**	5.4	**1129.15.40**	**1129.15.42**	**1129.15.47**
	rock wool, heated	133	6.2	**1129.17.90**	**1129.17.92**	**1129.17.97**	5.4	**1129.17.40**	**1129.17.42**	**1129.17.47**

Core borehole dimensions

Nominal width	Ø a	Ø c	b [mm]
For drain bodies without insulating bodies			
DN 70	340	90	10
DN 100	340	130	10
DN 125	340	160	10
For drain bodies with insulating bodies			
DN 70	340	290	10
DN 100	340	290	10
DN 125	340	290	10

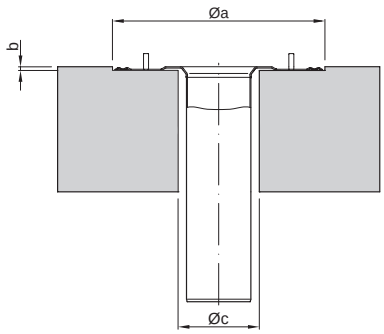

Recess dimensions

Nominal width	Type	Inclination	Recess dimensions drain body without insulating body	Recess dimensions drain body with insulating body
DN 70	Spin	90°	120 x 260 mm	230 x 360 mm
DN 100	Spin	90°	150 x 290 mm	230 x 360 mm
DN 125	Spin	90°	190 x 300 mm	230 x 360 mm

Contents
Gravity drainage
Syphonic drainage
Parking deck drainage
Balcony and terrace drainage
Facade drainage
Pipe systems

ACO Spin flat roof drains made of stainless steel with vertical outlet socket

DN 70 – DN 125

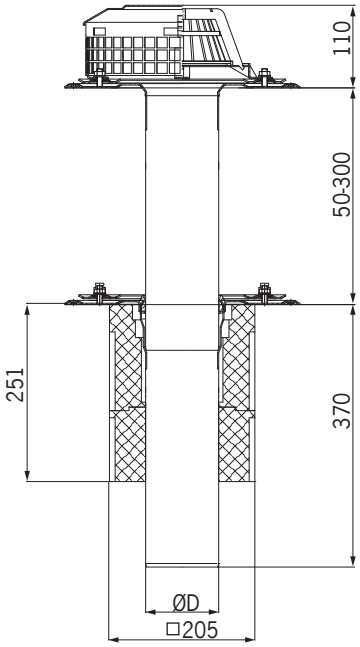

- Flat roof drain DN 70 – DN 125 with vertical outlet socket pursuant to DIN EN 1253
- Stainless steel, material 1.4301
- With two compression sealing flanges for sealing with two sealing membranes
- Sarnafil TG 66-15
  - for loose placement
  - for greened, gravelled roofs with foot and vehicle traffic
  - for roofs with additional loads
- Sikaplan 15 G
  - for loose placement with mechanical fixing
  - up to a roof gradient of maximum 20%
  - for roofs without additional loads

Nominal Width	Model	D [mm]	Stainless steel gravel basket				Plastic gravel basket			
			Weight [kg]	without ceiling membrane Article No.	Sarnafil TG 66-15 Article No.	Sikaplan 15 G Article No.	Weight [kg]	without ceiling membrane Article No.	Sarnafil TG 66-15 Article No.	Sikaplan 15 G Article No.
DN 70	uninsulated	73	7.3	**1179.20.60**	**1179.20.65**	**1179.20.69**	6.4	**1179.20.10**	**1179.20.15**	**1179.20.19**
	polystyrene	73	8.4	**1179.25.60**	**1179.25.65**	**1179.25.69**	6.5	**1179.25.10**	**1179.25.15**	**1179.25.19**
	rock wool	73	8.4	**1179.27.60**	**1179.27.65**	**1179.27.69**	6.5	**1179.27.10**	**1179.27.15**	**1179.27.19**
	polystyrene, heated	73	8.6	**1179.25.90**	**1179.25.95**	**1179.25.99**	6.7	**1179.25.40**	**1179.25.45**	**1179.25.49**
	rock wool, heated	73	8.6	**1179.27.90**	**1179.27.95**	**1179.27.99**	6.7	**1179.27.40**	**1179.27.45**	**1179.27.49**
DN 100	uninsulated	103	7.9	**1119.20.60**	**1119.20.65**	**1119.12.69**	7.0	**1119.20.10**	**1119.20.15**	**1119.20.19**
	polystyrene	103	8.2	**1119.25.60**	**1119.25.65**	**1119.25.69**	7.1	**1119.25.10**	**1119.25.15**	**1119.25.19**
	rock wool	103	8.2	**1119.27.60**	**1119.27.65**	**1119.27.69**	7.1	**1119.27.10**	**1119.27.15**	**1119.27.19**
	polystyrene, heated	103	8.4	**1119.25.90**	**1119.25.95**	**1119.25.99**	7.3	**1119.25.40**	**1119.25.45**	**1119.25.49**
	rock wool, heated	103	8.4	**1119.27.90**	**1119.27.95**	**1119.27.99**	7.3	**1119.27.40**	**1119.27.45**	**1119.27.49**
DN 125	uninsulated	133	9.5	**1129.20.60**	**1129.20.65**	**1129.20.69**	8.6	**1129.20.10**	**1129.20.15**	**1129.20.19**
	polystyrene	133	9.6	**1129.25.60**	**1129.25.65**	**1129.25.69**	8.8	**1129.25.10**	**1129.25.15**	**1129.25.19**
	rock wool	133	9.6	**1129.27.60**	**1129.27.65**	**1129.27.69**	8.8	**1129.27.10**	**1129.27.15**	**1129.27.19**
	polystyrene, heated	133	9.8	**1129.25.90**	**1129.25.95**	**1129.25.99**	9.0	**1129.25.40**	**1129.25.45**	**1129.25.49**
	rock wool, heated	133	9.8	**1129.27.90**	**1129.27.95**	**1129.27.99**	9.0	**1129.27.40**	**1129.27.45**	**1129.27.49**

Core borehole dimensions

Nominal width	Ø a	Ø c	b [mm]
For drain bodies without insulating bodies			
DN 70	340	90	10
DN 100	340	130	10
DN 125	340	160	10
For drain bodies with insulating bodies			
DN 70	340	290	10
DN 100	340	290	10
DN 125	340	290	10

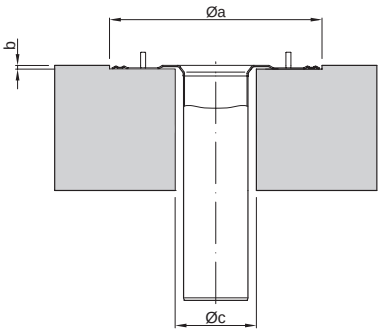

Recess dimensions

Nominal width	Type	Inclination	Recess dimensions drain body without insulating body	Recess dimensions drain body with insulating body
DN 70	Spin	90°	120 x 260 mm	230 x 360 mm
DN 100	Spin	90°	150 x 290 mm	230 x 360 mm
DN 125	Spin	90°	190 x 300 mm	230 x 360 mm

ACO Spin flat roof drains made of stainless steel with lateral outlet socket

DN 70 – DN 125

- Flat roof drain DN 70 – DN 125 with lateral outlet socket pursuant to DIN EN 1253
- Stainless steel, material 1.4301
- With compression sealing flange for sealing one sealing membrane
- Optionally available with a gravel basket made of plastic or stainless steel

- Sarnafil TG 66-15
  - for loose placement
  - for greened, gravelled roofs with foot and vehicle traffic
  - for roofs with additional loads
- Sikaplan 15 G
  - for loose placement with mechanical fixing
  - up to a roof gradient of maximum 20%
  - for roofs without additional loads

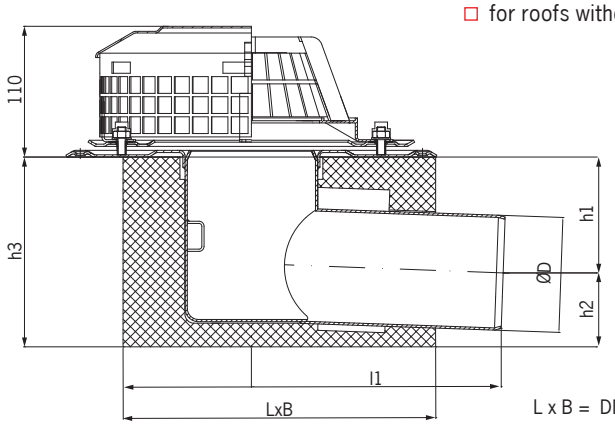

L x B = DN 70: 260 x 190
DN 100/125: 280 x 230

Nominal Width	76						Stainless steel gravel basket				Plastic gravel basket			
	Model	D [mm]	h1	h2	h3	l1	Weight [kg]	without ceiling membrane Article No.	Sarnafil TG 66-15 Article No.	Sikaplan 15 G Article No.	Weight [kg]	without ceiling membrane Article No.	Sarnafil TG 66-15 Article No.	Sikaplan 15 G Article No.
DN 70	uninsulated	73	95	45	140	213	4.4	**1175.10.60**	**1175.10.62**	**1175.10.67**	3.7	**1175.10.10**	**1175.10.12**	**1175.10.17**
	polystyrene	73	95	45	140	213	4.6	**1175.15.60**	**1175.15.62**	**1175.15.67**	3.9	**1175.15.10**	**1175.15.12**	**1175.15.17**
	rock wool	73	95	45	140	213	4.6	**1175.17.60**	**1175.17.62**	**1175.17.67**	3.9	**1175.17.10**	**1175.17.12**	**1175.17.17**
	polystyrene, heated	73	95	45	140	213	4.8	**1175.15.90**	**1175.15.92**	**1175.15.97**	4.1	**1175.15.40**	**1175.15.42**	**1175.15.47**
	rock wool, heated	73	95	45	140	213	4.8	**1175.17.90**	**1175.17.92**	**1175.17.97**	4.1	**1175.17.40**	**1175.17.42**	**1175.17.47**
DN 100	uninsulated	103	104	66	170	226	4.9	**1115.10.60**	**1115.10.62**	**1115.10.67**	4.1	**1115.10.10**	**1115.10.12**	**1115.10.17**
	polystyrene	103	104	66	170	226	5.1	**1115.15.60**	**1115.15.62**	**1115.15.67**	4.2	**1115.15.10**	**1115.15.12**	**1115.15.17**
	rock wool	103	104	66	170	226	5.1	**1115.17.60**	**1115.17.62**	**1115.17.67**	4.2	**1115.17.10**	**1115.17.12**	**1115.17.17**
	polystyrene, heated	103	104	66	170	226	5.3	**1115.15.90**	**1115.15.92**	**1115.15.97**	4.4	**1115.15.40**	**1115.15.42**	**1115.15.47**
	rock wool, heated	103	104	66	170	226	5.3	**1115.17.90**	**1115.17.92**	**1115.17.97**	4.4	**1115.17.40**	**1115.17.42**	**1115.17.47**
DN 125	uninsulated	133	124	76	200	230	5.6	**1125.10.60**	**1125.10.62**	**1125.10.67**	5.1	**1125.10.10**	**1125.10.12**	**1125.10.17**
	polystyrene	133	124	76	200	230	5.8	**1125.15.60**	**1125.15.62**	**1125.15.67**	5.2	**1125.15.10**	**1125.15.12**	**1125.15.17**
	rock wool	133	124	76	200	230	5.8	**1125.17.60**	**1125.17.62**	**1125.17.67**	5.2	**1125.17.10**	**1125.17.12**	**1125.17.17**
	polystyrene, heated	133	124	76	200	230	6.0	**1125.15.90**	**1125.15.92**	**1125.15.97**	5.4	**1125.15.40**	**1125.15.42**	**1125.15.47**
	rock wool, heated	133	124	76	200	230	6.0	**1125.17.90**	**1125.17.92**	**1125.17.97**	5.4	**1125.17.40**	**1125.17.42**	**1125.17.47**

Recess dimensions

Nominal width	Type	Inclination	Recess dimensions drain body without insulating body	Recess dimensions drain body with insulating body
DN 70	Spin	1.5°	120 x 360 mm	220 x 360 mm
DN 100	Spin	1.5°	150 x 400 mm	260 x 430 mm
DN 125	Spin	1.5°	190 x 400 mm	260 x 430 mm

Contents
Gravity drainage
Syphonic drainage
Parking deck drainage
Balcony and terrace drainage
Facade drainage
Pipe systems

ACO Spin flat roof drains made of stainless steel with lateral outlet socket DN 70 – DN 125

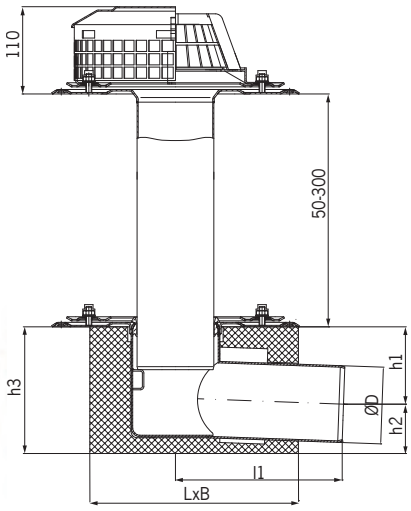

L x B = DN 70: 260 x 190
DN 100/125: 280 x 230

- Flat roof drain DN 70 – DN 125 with lateral outlet socket pursuant to DIN EN 1253
- Stainless steel, material 1.4301
- With two compression sealing flanges for sealing with two sealing membranes
- Sarnafil TG 66-15
  - for loose placement
  - for greened, gravelled roofs with foot and vehicle traffic
  - for roofs with additional loads
- Sikaplan 15 G
  - for loose placement with mechanical fixing
  - up to a roof gradient of maximum 20%
  - for roofs without additional loads

Nominal width	Model	D [mm]	h1	h2	h3	l1	Stainless steel gravel basket				Plastic gravel basket			
							Weight [kg]	without ceiling membrane Article No.	Sarnafil TG 66-15 Article No.	Sikaplan 15 G Article No.	Weight [kg]	without ceiling membrane Article No.	Sarnafil TG 66-15 Article No.	Sikaplan 15 G Article No.
DN 70	uninsulated	73	95	118	140	213	7.1	**1175.20.60**	**1175.20.65**	**1175.20.69**	6.4	**1175.20.10**	**1175.20.15**	**1175.20.19**
	polystyrene	73	95	118	140	213	7.3	**1175.25.60**	**1175.25.65**	**1175.25.69**	6.6	**1175.25.10**	**1175.25.15**	**1175.25.19**
	rock wool	73	95	118	140	213	7.5	**1175.27.60**	**1175.27.65**	**1175.27.69**	6.8	**1175.27.10**	**1175.27.15**	**1175.27.19**
	polystyrene, heated	73	95	118	140	213	7.3	**1175.25.90**	**1175.25.95**	**1175.25.99**	6.6	**1175.25.40**	**1175.25.45**	**1175.25.49**
	rock wool, heated	73	95	118	140	213	7.5	**1175.27.90**	**1175.27.95**	**1175.27.99**	6.8	**1175.27.40**	**1175.27.45**	**1175.27.49**
DN 100	uninsulated	103	104	148	170	226	7.6	**1115.20.60**	**1115.20.65**	**1115.20.69**	6.8	**1115.20.10**	**1115.20.15**	**1115.20.19**
	polystyrene	103	104	148	170	226	7.8	**1115.25.60**	**1115.25.65**	**1115.25.69**	6.9	**1115.25.10**	**1115.25.15**	**1115.25.19**
	rock wool	103	104	148	170	226	8.0	**1115.27.60**	**1115.27.65**	**1115.27.69**	7.1	**1115.27.10**	**1115.27.15**	**1115.27.19**
	polystyrene, heated	103	104	148	170	226	7.8	**1115.25.90**	**1115.25.95**	**1115.25.99**	6.9	**1115.25.40**	**1115.25.45**	**1115.25.49**
	rock wool, heated	103	104	148	170	226	8.0	**1115.27.90**	**1115.27.95**	**1115.27.99**	7.1	**1115.27.40**	**1115.27.45**	**1115.27.49**
DN 125	uninsulated	133	124	178	200	230	8.3	**1125.20.60**	**1125.20.65**	**1125.20.69**	7.8	**1125.20.10**	**1125.20.15**	**1125.20.19**
	polystyrene	133	124	178	200	230	8.5	**1125.25.60**	**1125.25.65**	**1125.25.69**	7.9	**1125.25.10**	**1125.25.15**	**1125.25.19**
	rock wool	133	124	178	200	230	8.7	**1125.27.60**	**1125.27.65**	**1125.27.69**	8.1	**1125.27.10**	**1125.27.15**	**1125.27.19**
	polystyrene, heated	133	124	178	200	230	8.5	**1125.25.90**	**1125.25.95**	**1125.25.99**	7.9	**1125.25.40**	**1125.25.45**	**1125.25.49**
	rock wool, heated	133	124	178	200	230	8.7	**1125.27.90**	**1125.27.95**	**1125.27.99**	8.1	**1125.27.40**	**1125.27.45**	**1125.27.49**

Recess dimensions

Nominal width	Type	Inclination	Recess dimensions drain body without insulating body	Recess dimensions drain body with insulating body
DN 70	Spin	90°	120 x 360 mm	220 x 360 mm
DN 100	Spin	90°	150 x 400 mm	260 x 430 mm
DN 125	Spin	90°	190 x 400 mm	260 x 430 mm

Additional components

ACO Spin flat roof drains DN 70 – DN 125 made of stainless steel

	Scale drawing	Product description	Model	Article No.
	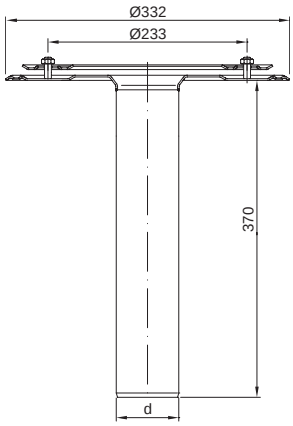	**Drain body for a one-piece or two-piece flat roof drain with vertical or horizontal outlet socket** stainless steel, material 1.4301, with compression sealing flange. Warning! No extension piece for a second sealing membrane level can be installed after installation!	DN 70 (d= 73 mm) DN 100 (d= 103 mm) DN 125 (d= 133 mm)	**0174.47.30** **0174.47.31** **0174.47.32**
	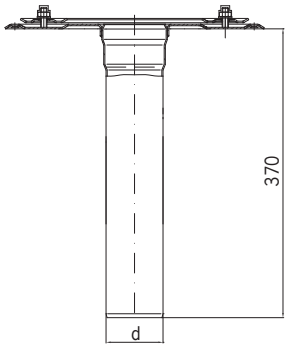	**Lower part for two-piece flat roof drain** stainless steel, material 1.4301 with compression sealing flange	DN 70 (d= 73 mm) DN 100 (d= 103 mm) DN 125 (d= 133 mm)	**0174.47.15** **0174.47.16** **0174.47.17**
	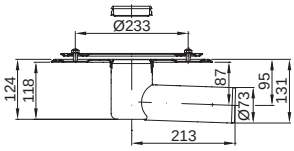	**Drain body/lower part for one-piece or two-piece flat roof drain with lateral outlet socket** stainless steel, material 1.4301, with compression sealing flange	DN 70 (d= 73 mm)	**0174.48.03**
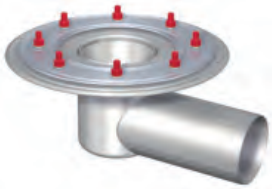	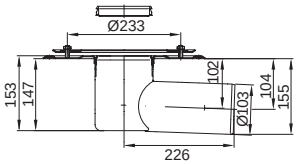	**Drain body/lower part for one-piece or two-piece flat roof drain with lateral outlet socket** stainless steel, material 1.4301, with compression sealing flange	DN 100 (d= 103 mm)	**0174.48.04**
	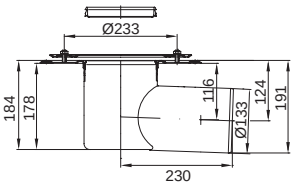	**Drain body/lower part for one-piece or two-piece flat roof drain with lateral outlet socket** stainless steel, material 1.4301, with compression sealing flange	DN 125 (d= 133 mm)	**0174.48.11**

Contents
Gravity drainage
Syphonic drainage
Parking deck drainage
Balcony and terrace drainage
Facade drainage
Pipe systems

	Scale drawing	Product description	Model	Article No.
	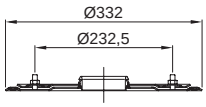	**Positioning flange** with compression sealing flange, stainless steel, material 1.4301, for lower parts DN 70 in the Spin product line	For unheated model	**0174.46.54**
	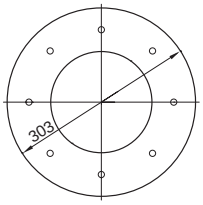	**Flange seal**	EPDM, thickness: 4 mm EPDM, thickness: 5 mm PVC-soft, thickness: 4 mm NBR/SBR, thickness: 4 mm	**0174.42.87** **0174.42.95** **0174.42.92** **0174.42.97**
	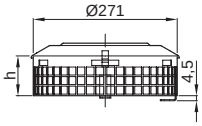	**Gravel basket** stainless steel, fits all Spin flat roof drains made of stainless steel	Height: 75 mm Height: 225 mm	**0174.46.63** **0174.46.64**
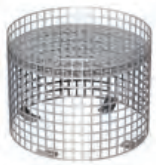	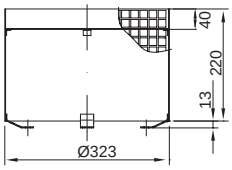	**Gravel basket for reversed roof** stainless steel, material 1.4301, load class H 1.5		**0153.60.01**
	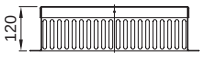	**Control shaft** stainless steel, material 1.4301, dimensions: 400 x 400 mm, height: 120 mm, load class H 1.5		**0153.73.05**
	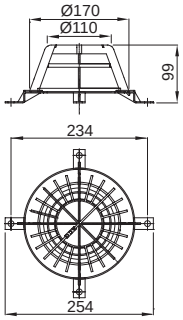	**Gravel basket made of plastic** fits all Spin flat roof drains made of stainless steel		**0174.87.36**

	Scale drawing	Product description	Model	Article No.
	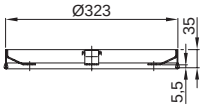	**Impoundment ring** stainless steel, material 1.4301	DN 70/DN100, Height: 35 mm DN 125, Height: 45 mm	**0174.46.76** **0174.46.77**
	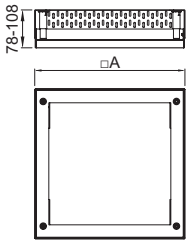	**Profiline top section** steel, galvanised, dimensions: 400 x 400 mm height adjustable from 78–108 mm		**38801**
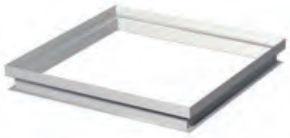	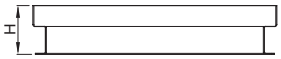	**Extension for Profiline top section** for frame dimensions 400 x 400 mm	Height: 30 mm Height: 60 mm Height: 120 mm	**38685** **38687** **38689**
		**Flat roof heating** fits all flat roof drains DN 70 – DN 150, Electrical supply: 220-240 V, AC, Nominal power: 25 W, Protection class: I, Protection type: IP 67, Cables: SIHF 3 x 1 mm², 1.5 m G 1.5		**0174.84.32**
	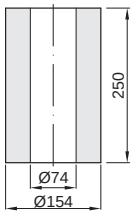	**Rock wool insulation, construction material class A1** for all vertical drain bodies Spin and lower parts	DN 70 DN 100 DN 125	**0174.46.57** **0174.47.21** **0174.47.22**
	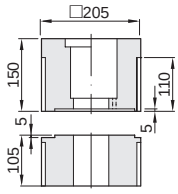	**Polystyrene insulation, PS 30** for vertical drain bodies Spin and lower parts	DN 70 DN 100 DN 125	**0174.47.18** **0174.47.19** **0174.47.20**
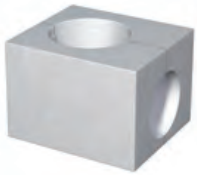	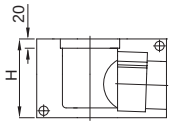	**Polystyrene insulation, PS 30** for lateral lower parts Spin	DN 70, 260x190x140 DN 100, 280x230x170 DN 125, 280x230x200	**0174.48.06** **0174.48.07** **0174.48.08**
	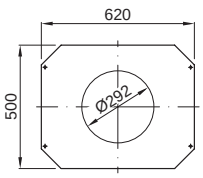	**Mounting sheet for trapezoidal sheet roofs** steel, galvanised		**0174.46.61**

Contents
Gravity drainage
Syphonic drainage
Parking deck drainage
Balcony and terrace drainage
Facade drainage
Pipe systems

ACO fire protection drains Spin – for gravity drainage

Complete drain 1-part/inclination: 90 °

- Fire resistance class R30 – R120 tested as per Gen. Build. Sup. Z-19.17-1888
- With factory inserted sealing membrane
- Flat roof gully unit tested for leaks as per DIN EN 1253
- Made from stainless steel, material grade 304
- Airlock with fire protection insert
- With clamping flange for sealing with 1 sealing membrane
- Usable for 1 sealing plane
- Socket inclination: 90°
- Insulation: uninsulated with/ out heating

- Insulation
  - uninsulated with/without heating
- Sarnafil TG 66-15
  - for loose placement
  - for greened, gravelled roofs with foot and vehicle traffic
  - for roofs with additional loads
- Sikaplan 15 G
  - for loose placement with mechanical fixing
  - up to a roof gradient of maximum 20%
  - for roofs without additional loads

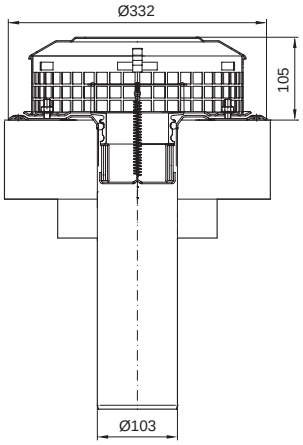

Nominal width: DN 100/Diameter: 103 mm

gravel basket	Insulation	Recess [mm]	Weight [kg]	Article No. without ceiling membrane	Article No. Sarnafil TG 66-15	Article No. Sikaplan 15 G
stainless steel	uninsulated	150 x 290	5.1	**1311.10.60**	**1311.10.62**	**1311.10.67**
	insulated, heated	150 x 290	5.3	**1311.10.90**	**1311.10.92**	**1311.10.97**
	foam glass	230 x 360	6.0	**1311.18.60**	**1311.18.62**	**1311.18.67**
	foam glass, heated	230 x 360	3.2	**1311.18.90**	**1311.18.92**	**1311.18.97**

Core borehole dimensions

Nominal width	Ø a	Ø c	b [mm]
For drain bodies without insulating bodies			
DN 100	340	130	10
For drain bodies with insulating bodies			
DN 100	340	290	10

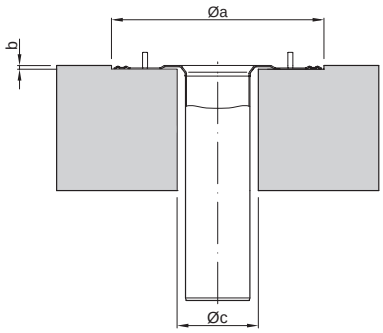

Fire protection accessories

ACO Spin flat roof drains DN 100 made of stainless steel

	Scale drawing	Product description	Model	Article No.
	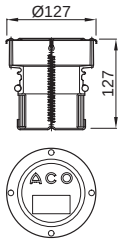	**Fire protection insert** fits Spin flat roof drains DN 100 with 90° outlet socket inclination. Warning! The outflow capacity is reduced when this insert is installed (refer to page 15).		**7034.20.15**
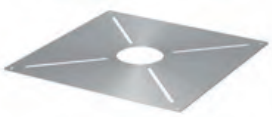	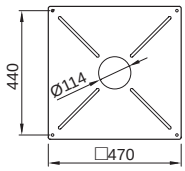	**Heat shield** stainless steel, for Spin flat roof drain DN 100, with impact dowels M8 x 16		**7034.20.17**
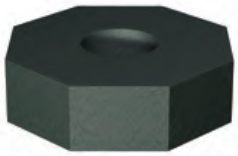	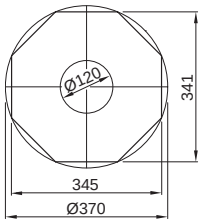	**Insulating body** foam glass, for Spin vertical drain bodies and lower parts		**0174.77.96**
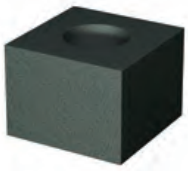	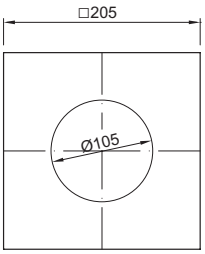	**Insulating sleeve** foam glass, for Spin vertical drain bodies and lower parts for length adaptation (height: 150 mm)		**0174.77.94**

Contents
Gravity drainage
Syphonic drainage
Parking deck drainage
Balcony and terrace drainage
Facade drainage
Pipe systems

Installation recommendation

Gravity drainage with Attika flat roof gully and duct made of stainless steel

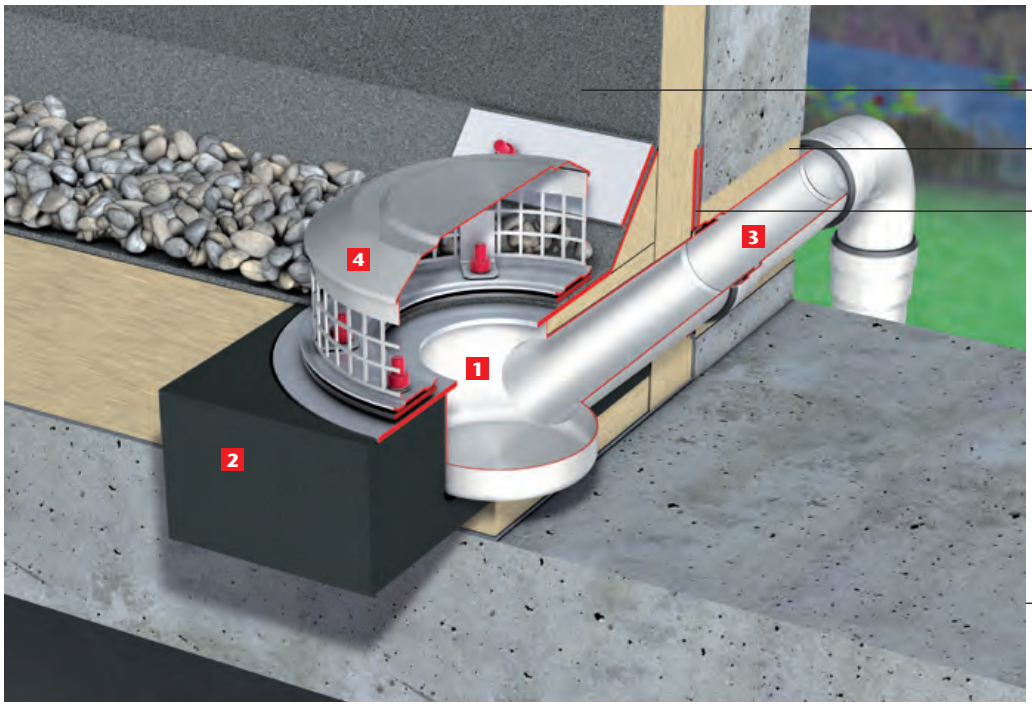

Sealing membrane

Insulation

Sealing membrane (vapour trap)

Ceiling (thickness according to the structural engineering specifications)

1 **Attika flat roof gully made of stainless steel DN 70, 1.5° socket outlet inclination for sealing with bitumen**
Article No. 0174.78.22

2 **Isolating body**
Article No. 0154.02.94

3 **Attika duct DN 70**
Article No. 0174.48.66

4 **Gravel bucket of stainless steel**
Article No. 0174.46.59

DN 70 – DN 100

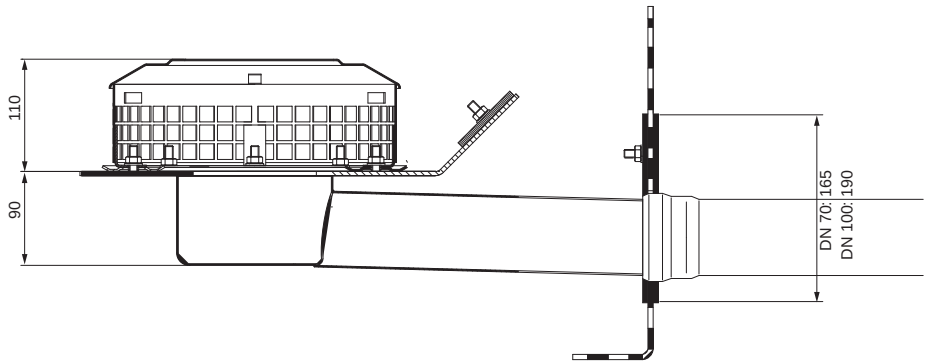

Extension heights in mm

Attika flat roof drains made of stainless steel

DN 70–DN 100

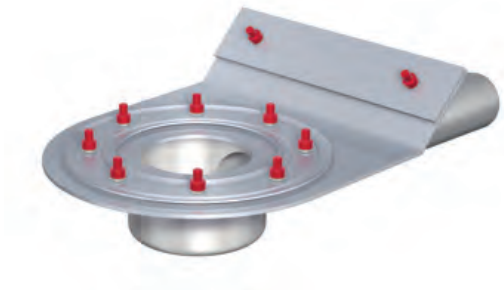

- Drain body DN 70 or DN 100
- Stainless steel, material 1.4301
- With compression sealing flange
- Direct connection to ACO GM-X pipe system, connection to other types of pipe requires transition fittings

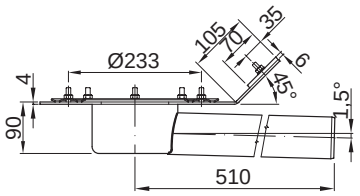

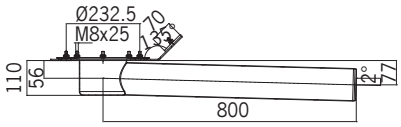

For bitumen sealing membranes		
Nominal width	DN 70	DN 100
Article No.	**0174.78.22**	**0174.78.24**

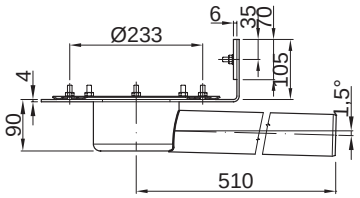

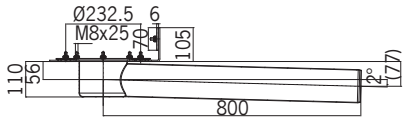

For plastic sealing membranes		
Nominal width	DN 70	DN 100
Article No.	**0174.78.23**	**0174.78.25**

Outflow capacities

Nominal width	required value according to DIN with water built up 35 mm	actual value according to DIN with water built up 35 mm	actual value for water-spout 35 mm with water build up 35 mm
DN 70	1.7 l/s	5.4 l/s	3.1 l/s
DN 100	4.5 l/s	6.0 l/s	5.0 l/s

Contents
Gravity drainage
Syphonic drainage
Parking deck drainage
Balcony and terrace drainage
Facade drainage
Pipe systems

Additional components

Attika flat roof drains DN 70 – DN 100 made of stainless steel

	Scale drawing	Product description	Model	Article No.
	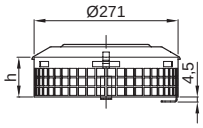	**Stainless steel gravel basket** Fits all Spin flat roof drains made of stainless steel	Height: 75 mm Height: 225 mm	**0174.46.63** **0174.46.64**
	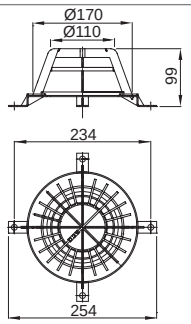	**Plastic gravel basket** fits all Spin flat roof drains made of stainless steel		**0174.87.36**
	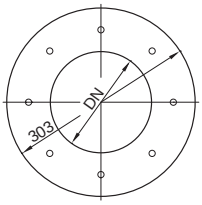	**Flange seal** diameter: 303 mm Thickness: 4 mm	EPDM PVC-soft NBR/SBR	**0174.42.87** **0174.42.92** **0174.42.97**
	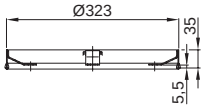	**Impoundment ring** for emergency drains, stainless steel, 1.4301, diameter: 324 mm, height: 35 mm		**0174.46.76**
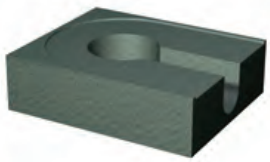	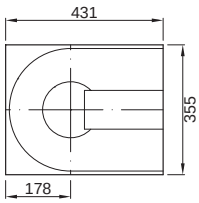	**Insulating body** foam glass	DN 70 DN 100	**0154.02.95** **0154.02.94**
	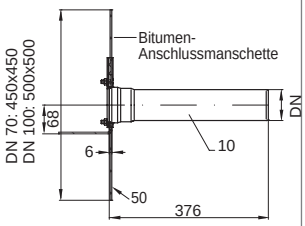	**Attika duct** DN 100 with pre-installed clamped-in bitumen connecting sleeve	DN 70 DN 100	**0174.48.66** **0174.48.67**

Installation recommendation

Multiflex flat roof duct made of stainless steel

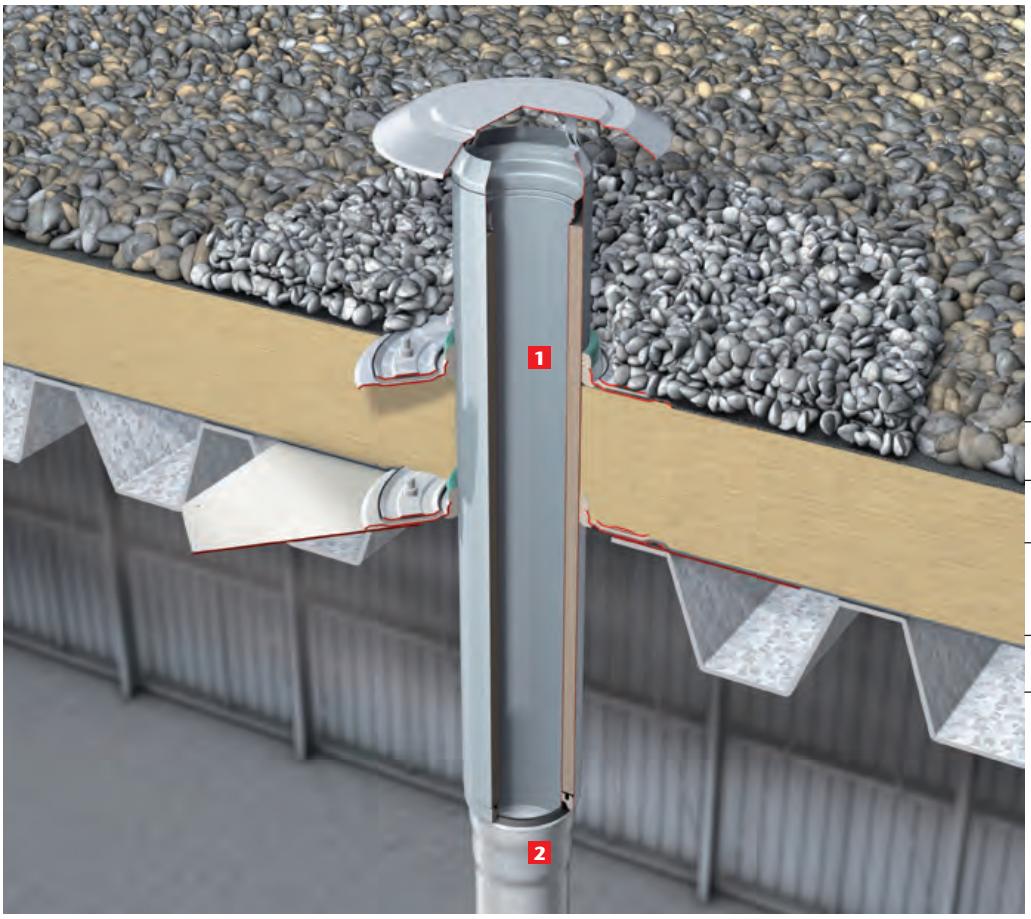

Gravel layer
Sealing membrane
Thermal insulation
Sealing membrane (vapour trap)
Trapezoidal sheet metal roof

1 **Multiflex flat roof duct DN 100**
With rain cap and two flanges
Article No. 0174.43.05

2 **GM-X pipe**

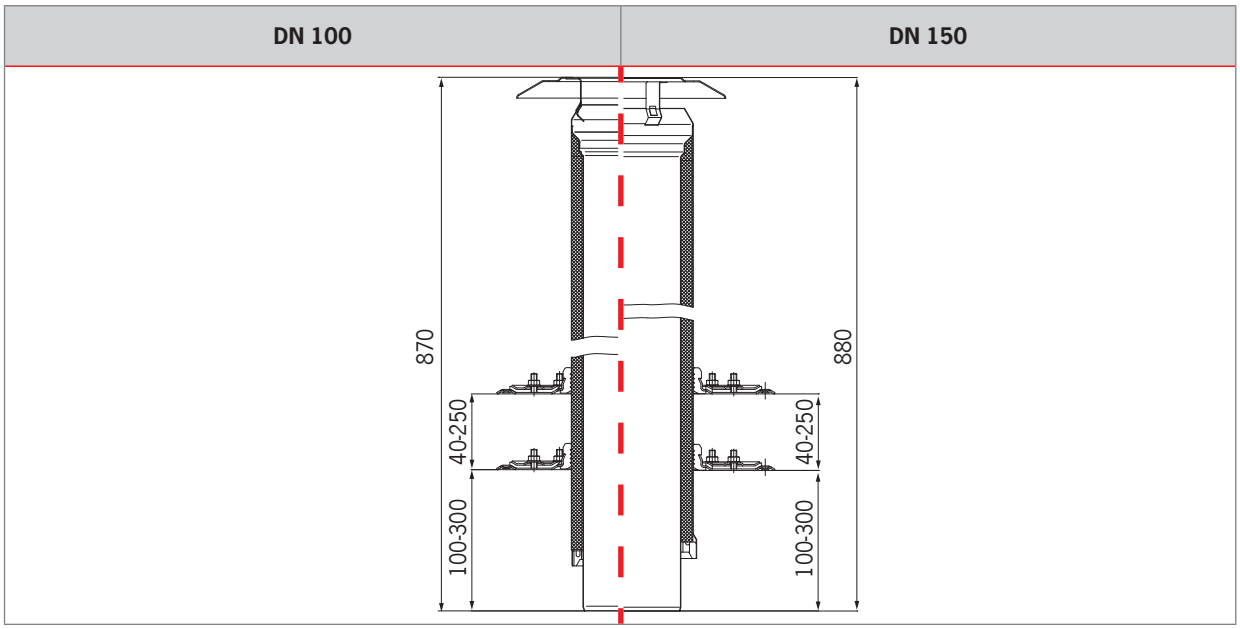

Extension heights in mm

Contents
Gravity drainage
Syphonic drainage
Parking deck drainage
Balcony and terrace drainage
Facade drainage
Pipe systems

Multiflex flat roof duct made of stainless steel

DN 100 or DN 150

- Flat roof duct DN 100 or DN 150
- Stainless steel, material 1.4301
- Thermally insulated model
- Optional with one or two height adjustable compression sealing flanges
- Optional with or without rain cap
- Direct connection to ACO GM-X pipe system, connecting to other types of pipe requires transition fittings

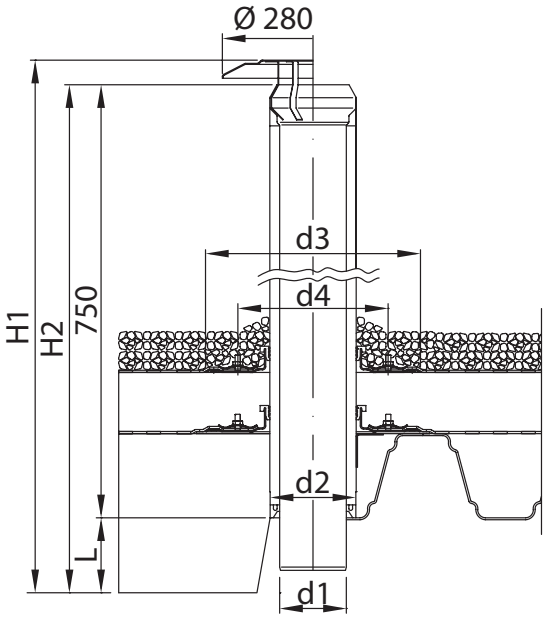

d_3 = external flange diameter
d_4 = bolt circle diameter, z minus number of bolts
d_2 = outer sleeve minus diameter
d_1 = pointed end minus diameter

Nominal width	Number of flanges	Model	d_1	d_2	d_3	d_4	L	z	H_1	H_2	Weight	Article No.
DN 100 or DN 70*	1	with rain cap	102	133	332	233	80	8 x M8	870	830	6	**0174.43.01**
	2	with rain cap									8	**0174.43.05**
	1										5	**0174.43.09**
	2										7	**0174.43.13**
DN 150 or DN 100**	1	with rain cap	159	192	410	300	90	10 x M8	880	840	8	**0174.43.03**
	2	with rain cap									11	**0174.43.07**
	1										7	**0174.43.11**
	2										10	**0174.43.15**

*The following components must be ordered for a DN 70 duct:
Duct DN 100 according to the previous table plus GM-X adapter piece art. no. 0174.12.73 plus GM-X sealing ring art. no. 0174.14.71

**The following components must be ordered for a DN 125 duct:
Duct DN 150 according to the previous table plus GM-X adapter piece art. no. 0174.12.76 plus GM-X sealing ring art. no. 0174.14.74